2019

RANK Improvement WORKBOOK

Answer key and Hint of Objective & Conventional *Questions*

Civil Engineering

Design of Steel Structures

MADE EASY Publications

MADE EASY Publications

1 Connection

LEVEL 1 Objective Questions

1. (a)
2. (a)
3. (c)
4. (24.71)
5. (a)
6. (a)
7. (b)
8. (b)
9. (b)
10. (d)
11. (117)
12. (104.8)

© Copyright: Subject matter to MADE EASY Publications, New Delhi. No part of this book may be reproduced or utilised in any form without the written permission.

LEVEL 2 Objective Questions

13. (c)
14. (a)
15. (c)
16. (c)
17. (d)
18. (90)
19. (45.27)
20. (90.54)
21. (a)
22. (c)
23. (b)
24. (b)
25. (b)
26. (c)

LEVEL 3 Conventional Questions

Solution :

90.52 kN, 30.66%

Solution :

174 kN

Solution :

Yes, 1.875%

Solution : 4

In complete bearing, splice plates are designed for $\left(\frac{P}{2}\right)$ force only.

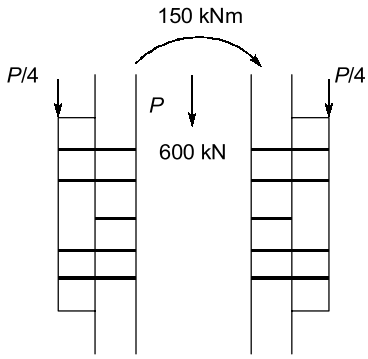

Thickness of web, $t_w = 7.6$ mm

$2b = 250$ mm

Use 20 mm nominal diameter of bolts of grade 4.6,

No. of bolts required, $n_{bolts} = \dfrac{\left(\frac{P}{4} + \frac{M}{e_1}\right)}{\text{Bolt strength}}$

Bolt strength is given by minimum of following two:

(a) Shearing strength of bolt is $= \left(n_1 \times A_{net} \times \dfrac{f_{ub}}{\sqrt{3} \times 1.25}\right)$

$= 1 \times 0.78 \times \dfrac{\pi}{4} \times (20)^2 \times \dfrac{400}{\sqrt{3} \times 1.25} = 45.272$ kN

(b) Bearing strength of bolt is $= 2.5\, k_B dt \times \dfrac{f_u}{1.25}$

$= 2.5 \times 0.5 \times 20 \times 7.6 \times \dfrac{410}{1.25}$

$= 62.32$ kN

Bolt strength $= 45.272$ kN

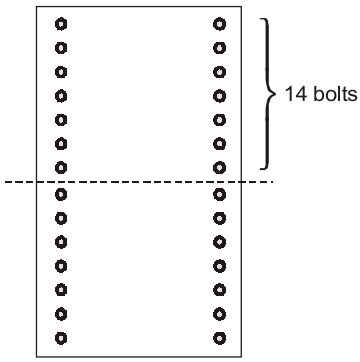

No. of Bolts given by, $n = \dfrac{\left(\frac{600}{4}\right) + \left(\frac{150}{0.3}\right)}{45.272}$

$= 13.357 \simeq 14$ **bolts provided.**

Flange plate length $= 2[2.5 \times 20 \times 6 + 2 \times 1.5 \times 22]$

$= 732$ mm

Let thickness of flange plate $= t$

$\therefore \quad \dfrac{\left(\frac{P}{4} + \frac{M}{l_1}\right)}{(B \times t_1)} \le \dfrac{f_y}{1.1}$

$$\Rightarrow \quad \frac{\left(\frac{600}{4}+\frac{150}{0.3}\right)}{(250\times t)} \le \frac{f_y}{1.1}$$

$$\Rightarrow \quad t \ge 10.4 \text{ mm}$$

$\therefore$ Provide flange splice plate with given dimensions,

length = 750 mm

width = 250 mm

thickness = 12 mm

Solution : 5

V_C = 37.45 kN, V_G = 13.45 kN

Solution : 7

For Fe410 grade of steel: f_u = 410 MPa, f_y = 250 MPa

Partial safety factor againt yielding, γ_{mo} = 1.10

For site welding: partial safety factor for material,

γ_{mw} = 1.5

From IS Handbook No. 1, the relevant properties of ISA 80 mm × 50 mm × 8 mm are:

A_g = 978 mm^2, C_{zz} = 27.3 mm

The design strength of the member governed by yielding of gross section,

$$T_{dg} = A_g \frac{f_y}{\gamma_{mo}}$$

$$= 978\times\frac{250}{1.1}\times10^{-3} = 222.27 \text{ kN}$$

Therefore, the weld will be designed to transmit a force equal to 222.27 kN.

The force to be resisted by the weld at the lower side of the angle,

$$P_1 = \frac{222.27\times(80-27.3)}{80} = 146.42 \text{ kN}$$

The force to be resisted by the weld at the upper side of the angle,

$$P_2 = \frac{222.27\times27.3}{80} = 75.849 \text{ kN} \simeq 75.85 \text{ kN}$$

Let us assume the size of weld, S = 6 mm (> 3 mm)

Effective throat thickness of the weld, $t = KS = 0.7 \times 6 = 4.2$ mm

The design strength of the weld, $P_{dw} = l_w t_t \frac{f_u}{\sqrt{3}\gamma_{mw}}$

$$P_{dw1} = P_1 = 146.42 \times 10^3$$

$$= l_{w1}\times4.2\times\frac{400}{\sqrt{3}\times1.5}$$

$$\Rightarrow \quad l_{w1} = 220.91 \text{ mm} \simeq 221 \text{ mm}$$

and $P_{dw2} = P_2 = 75.85 \times 10^3$

$$= l_{w2}\times4.2\times\frac{400}{\sqrt{3}\times1.5}$$

 © Copyright

$\Rightarrow$ $l_{w2} = 114.44 \text{ mm} \simeq 115 \text{ mm}$

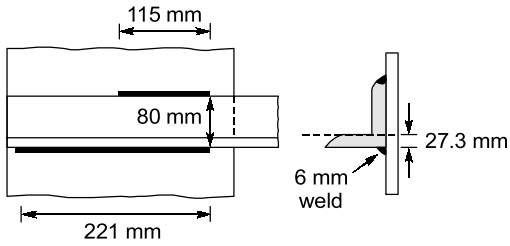

Solution : 7

For Fe410 grade of steel: $f_u = 410 \text{ MPa}$

For site weld: partial safety factor for material,

$$\gamma_{mw} = 1.5$$

$$\text{Total weld length} = l_{w1} + l_{w2} + 80 \text{ mm}$$

The strength of the weld required = the design strength of the tie number = 222.27 kN

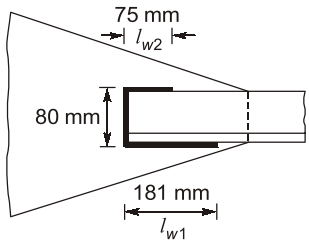

Design strength of the weld, $T_{dw} = l_w t_t \dfrac{f_u}{\sqrt{3}\gamma_{mb}}$

Design strength of 6 mm ($t_t = 0.7 \times 6 = 4.2$ mm) weld per mm length

$$= 1 \times 4.2 \times \frac{410}{\sqrt{3} \times 1.5} = 662.79 \text{ kN}$$

Equating the strength of weld to the load,

$$(l_{w1} + l_{w2} + 80) \times 662.79 = 222.27 \times 10^3$$

or, $l_{w1} + l_{w2} = 255.355 \text{ mm} \simeq 256 \text{ mm}$

Now, taking moment about top edge of angle section,

$$662.79 \times 80 \times \frac{80}{2} + 662.79 \times l_{w1} \times 80 = 222.27 \times 10^3 \times (80 - 27.3)$$

$$l_{w1} = 180.91 \simeq 181 \text{ mm}$$

Hence, $l_{w2} = 256 - 181 = 75 \text{ mm}$

Solution : 8

For Fe410 steel: $f_u = 410 \text{ MPa}$

For shop weld partial safety factor for material,

$$\gamma_{mw} = 1.5$$

$$\text{Permissible shear stress} = \frac{f_u}{\sqrt{3}\gamma_{mb}}$$

$$= \frac{410}{\sqrt{3}\times 1.25} = 189.37 \text{ N/mm}^2$$

Connection of web plate to flange plate:

Minimum size of weld = 5 mm (for 20 mm thick plate)

Maximum size of weld = 12 – 1.5 = 10.5 mm

Let us provide 7 mm size of fillet weld

Effective throat thickness of weld $t_t = KS = 0.7 \times 7 = 4.9$ mm

$\Sigma t_t = 2 \times 4.9 = 9.8$ mm

$A\bar{y} = 400 \times 20 \times (500 + 10) + 375 \times 16 \times (500 + 20 + 8)$

$= 724.8 \times 10^4 \text{ mm}^3$

$$I_{zz} = 2\times\left[\frac{375\times 16^3}{12} + 375\times 16\times 528^2 + \frac{400\times 20^3}{12} + 400\times 20\times 510^2 + \frac{12\times 1000^3}{12}\right]$$

$= 8.507 \times 10^9 \text{ mm}^4$

Shear stress: $$\frac{VA\bar{y}}{I_{zz}\Sigma t_t} = \frac{1500\times 10^3 \times 316.8\times 10^4}{8.507\times 10^9 \times 8.4}$$

$= 130.40 \text{ N/mm}^2 < 189.37 \text{ N/mm}^2$ (OK)

Connection of flange plate to flange cover plate:

Let us provide 6 mm size fillet weld.

Effective throat thickness, $t = KS = 0.7 \times 6 = 4.2$ mm

$\Sigma t_t = 2 \times 4.2 = 8.4$ mm

$A\bar{y} = 375 \times 16 \times (500 + 20 + 8) = 316.8 \times 10^4 \text{ mm}^3$

Shear stress: $$\frac{VA\bar{y}}{I_{zz}\Sigma t_t} = \frac{1500\times 10^3 \times 316.8\times 10^4}{8.507\times 10^9 \times 8.4} = 66.49 \text{ N/mm}^2 < 189.37 \text{ N/mm}^2 \text{(OK)}$$

Solution : 9

Selecting weld size:

Minimum weld size = 3 mm

Maximum weld size = Thickness of thicker plate – 1.5 mm

= 10 – 1.5 = 8.5 mm

Let us say weld size, $S = 5$ mm

Now design strength in welding should be just enough to resist total amount of gross load.

$\therefore \quad T_{dw} \geq Td_g$

$\Rightarrow \quad 0.7\, S\, L_{\text{eff}} \cdot \frac{f_u}{\sqrt{3}\gamma_{mw}} \geq \frac{A_g f_y}{\gamma_{mo}}$

where $\gamma_{mw} = 1.5$ (Partial safety factor for field weld)

$\gamma_{mo} = 1.1$

$\therefore \quad 0.7\times 5\times L_{\text{eff}} \times \frac{410}{\sqrt{3}\times 1.5} \geq \frac{(280\times 10)\times 250}{1.1}$

$\Rightarrow \quad L_{\text{eff}} \geq 1152.14 \text{ mm} \simeq 1155 \text{ mm (say)}$

Now providing three side continuous welding.

 © Copyright

$\therefore$ Weld length required along length = 1155 mm – 280 = 875 mm

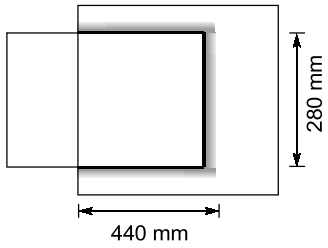

Overall weld length provided is, $L_T = L_{eff} + 2S$

$= 1155 + 2 \times 5 = 1165$ mm

Solution : 10

232.9 kN

Solution : 11

8.84 mm

Solution : 12

Connection of web and flange plate

Minimum size of weld = 3 mm

Maximum size of weld = 10 – 1.5 = 8.5 mm

Adopt a 6 mm size weld

$$\tau_{vf,\,cal} = \frac{VA_f\bar{Y}_f}{(I_{zz}\Sigma t)}$$

$$t = 0.7 \times 6 = 4.2 \text{ mm}$$

$$\Sigma t = 2 \times 4.2 = 8.4 \text{ mm}$$

$$A_f\bar{Y}_f = 300 \times 16(500 + 8) + 275 \times 12(500 + 16 + 6)$$

$$= 243.84 \times 10^4 + 172.26 \times 10^4$$

$$= 416.1 \times 10^4$$

$$I_{zz} = 2 \times \left[275 \times \frac{12^3}{12} + 275 \times 12 \times 522^2 + 300 \times \frac{16^3}{12} + 300 \times 16 \times 508^2 \right] + 10 \times \frac{1000^3}{12}$$

$$= 5.109 \times 10^9 \text{ mm}^4$$

$$\tau_{vf,\,cal} = \frac{800 \times 10^3 \times 416.1 \times 10^4}{(5.109 \times 10^9 \times 8.4)}$$

$$= 7.56 \text{ N/mm}^2 < \frac{410}{(\sqrt{3} \times 1.25)} = 189 \text{ N/mm}^2$$

Hence, the weld is safe.

Connection of flange plate to cover plate

Adopt a 6 mm fillet weld.

$$t_e = 6 \times 0.7 = 4.2 \text{ mm}$$

$$\Sigma t = 2 \times 4.2 = 8.4 \text{ mm}$$

$$A\bar{Y} = 275 \times 12 \times (500 + 16 + 6)$$

$$= 172.26 \times 10^4$$

$$\tau_{vf,\,cal} = \frac{800 \times 10^3 \times 172.26 \times 10^4}{(5.109 \times 10^9 \times 8.4)}$$

$= 32.11 \text{ N/mm}^2 < 189 \text{ N/mm}^2$

Hence the weld is safe.

Solution : 13

Flange width of ISHB 300 = 250 mm

Provide welding at the top and bottom of the seating angle, which acts as a bracket. The top weld will be in tension and the bottom will be in compression, in addition to shearing the shear force. Provide 250 mm length of weld at the top and bottom of the angle and denoting t as the effective throat thickness.

Strength of the weld

$$= \frac{t \times 0.7 \times 410}{(\sqrt{3} \times 1.5)} = 110.4t$$

Shear force in 1 mm length of weld

$$= \frac{75000}{2 \times 250} = 150 \text{ N/mm}$$ Force in 1 mm length

of weld due to bending moment

$$= \frac{75000 \times 38}{125 \times 250} = 91.2 \text{ N/mm}$$

Resultant force

$$= \sqrt{(150^2 + 91.2^2)} = 175.6 \text{ N/m}$$

Thus, $110.4t \geq 175.6$

or $t \geq 1.59$

Hence, a weld size of 3 mm should be provided.

Solution : 14

Factored load = $1.5 \times 175 = 262.5$ kN

Required length of the weld

$$L_w = \sqrt{\frac{6M}{R_{nw}}}$$

Flange thickness of ISHB 300 = 10.6 mm

Maximum size of weld = 10.6 – 1.5 = 9.1 mm

Minimum size of weld = 5 mm

Adopt 8 mm weld

Design strength of the weld

$$f_{wd} = \frac{410}{(\sqrt{3} \times 1.25)} = 189 \text{ N/mm}^2$$

$$R_{nw} = 189 \times 0.7 \times 8 = 1058.4 \text{ N/mm}$$

$$L_w = \sqrt{\left[\frac{(6 \times 26250 \times 1000 / 2)}{900 \text{ (est)}}\right]}$$

$$= 295.8 \text{ mm}$$

A reduced value of R_{nw} has been used to account for the direct shear effect also.

Try $L_w = 300$ mm

 © Copyright

Neglecting the end returns, stress due to direct shear

$$\tau_v = \frac{P}{2} L_w t_e = \frac{262.5 \times 1000}{2 \times 3000 \times 0.7 \times 8}$$
$$= 78.125 \text{ N/mm}^2$$

Stress due to bending

$$f_b = \frac{M_y}{I} = \frac{262.5 \times 1000 \times 100 \times 150}{\left[2 \times \frac{300^3}{12} \times 0.7 \times 8\right]}$$
$$= 156.25 \text{ N/mm}^2$$

Resultant stress

$$= \sqrt{78.125^2 + 156.25^2}$$
$$= 179.69 \text{ N/mm}^2 < 189 \text{ N/mm}^2$$

■■■■

2 Tension Member

LEVEL 1 Objective Questions

1. (2736)
2. 1039.23 (1037.00 to 1042.00)
3. (a)
4. (c)
5. (a)
6. (c)
7. (a)
8. (c)
9. (a)

© Copyright: Subject matter to MADE EASY Publications, New Delhi. No part of this book may be reproduced or utilised in any form without the written permission.

LEVEL 2 Objective Questions

10. 460.51
11. (c)
12. (c)
13. (b)
14. 1036.31
15. 406.50
16. (b)
17. 324.72
18. 295.2

LEVEL 3 Conventional Questions

Solution : 1

Let minimum thickness of plate $t_{min.}$ = 8 mm

Dead load, P_{DL} = 20 kN

Live load, P_{LL} = 60 kN

Total service load, $P = P_{DL} + P_{LL}$

$= 20 + 60 = 80$ kN

Design factored load, $P_1 = \gamma_f \times P$

$= 80 \times 1.5 = 120$ kN

Strength of bolt will be minimum of shear strength and bearing strength of bolt.

(a) Shearing strength of a bolt $= A_{net} \times \dfrac{f_{ub}}{\sqrt{3} \times \gamma_{mb}}$

$$= \left[0.78 \times \frac{\pi}{4} \times (16)^2\right] \times \frac{400}{\sqrt{3} \times 1.25} \text{ N} = \mathbf{28.974\ kN} \quad \text{...(i)}$$

(b) Bearing strength of bolt $= 2.5\, k_b \times d \times t_{min} \times \dfrac{f_{ub}}{\gamma_{m1}}$

Where K_b is minimum of $\begin{bmatrix} \dfrac{e}{3d_0} = \dfrac{1.5d_0}{3d_0} = 0.5 \\ \left(\dfrac{p}{3d_0} - 0.25\right) & = \left(\dfrac{2.5 \times 16}{3 \times 18} - 0.25\right) = 0.49 \\ \left(\dfrac{f_{ub}}{f_{up}}\right) & = \dfrac{400}{410} = 0.98 \\ 1 \end{bmatrix}$

$\therefore \quad k_B = 0.49$

$\therefore$ Bearing strength of bolt $= 2.5 \times 0.49 \times 16 \times 8 \times \dfrac{410}{1.25}$ N $= 51.43$ kN

$\therefore$ Strength of bolt is minimum of (i) and (ii) i.e., 28.974 kN

$\therefore$ No. of bolts required, $n = \dfrac{120}{28.974} = 4.14 \simeq 5$ bolts

$\therefore$ Pitch provided, $p = 2.5\, d = 2.5 \times 16 = 40$ mm

End distance $= 1.5\, d_0 = 1.5 \times 18 = 27$ mm

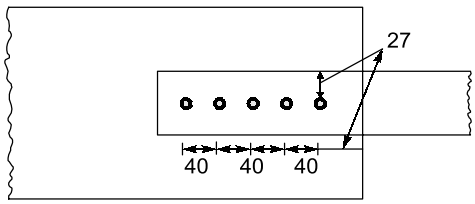

All dimension are in mm.

Width to plate provided, $B = 27 \times 2 = 45 \simeq 55$ mm
Thickness of plate $t = 8$ mm
No. of bolts provided, $n = 5$ bolts

Solution : 2

172.7 kN

Solution : 3

A pair of splice plates will be provided with one plate on each side of the splice. A suitable arrangement of the connectors is assumed and then the width and thickness of the splice plate is computed.

Let nominal diameter of rivet, $\phi = 18$ mm

$\therefore$ Gross diameter $= 18 + 1.5 = 19.5$ mm

Net tensile strength of the member assuming section to be weakend by one rivet hole figure.

$$= (160 - 19.5) \times 10 \times \frac{150}{10^3} = 210.75 \text{ kN}$$

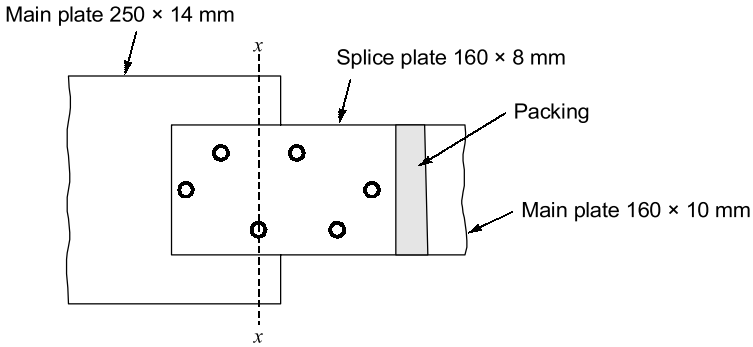

Let us assume the rivets to be power driven.

$\tau_{vf} = 100$ N/mm^2, $\sigma_{pf} = 300$ N/mm^2

Strength of rivet in double shear $= 2 \times \frac{\pi}{4} d^2 \tau_{vf}$

$$= 2 \times \frac{\pi}{4} 19.5^2 \times 100 \text{ N} = 59.729 \text{ kN}$$

Strength of rivet in bearing $= dt\sigma_{pf}$

$= 19.5 \times 10 \times 300 = 58500$ N $= 58.5$ kN

Rivet value, $R_v = 58.5$ kN

Number of rivets required on each side of the joints

$$= \frac{210.75 \times 10^3}{58500} = 3.6 \approx 5 \text{ mm}$$

Provide 18 mm, ϕ rivets, 5 in numbers as shown in figure.

The two sections are of different thickness. Therefore, packing will be required.

Thickness of packing $= 14 - 10 = 4$ mm

As the packing in less than 6 mm, no extra rivets will be required.

Width of splice plate = Width of main tie plate = 160 mm

The critical section for the splice plate is, section x-x. If t is the thickness of splice plates required, then

$(b - d) \times 2t \times \sigma_{at}$ = Net tensile strength of the section

$\Rightarrow$ $(160 - 19.5) \times 2t \times 150 = 210.75 \times 10^3$

 © Copyright

$$t = \frac{210.75 \times 10^3}{36300} = 5 \text{ mm}$$

The sum of the thickness of splice plates should not be less than the maximum thickness of the plates to be connected. Therefore, 8 mm thick plate is sufficient. Provide two 160 mm × 8 mm thick splice platess.

Length of the splice plate

Pitch of rivets = 2.5 ϕ = 2.5 × 18 = 45 mm

Provide rivets at a pitch of 60 mm. For 18 mm ϕ rivets edge distance is 29 mm.

Let us provide an edge distance of 30 mm.

∴ Length of splice plate = 4 × 60 + 4 × 30 = 360 mm

Therefore, provide two 360 × 160 × 8 mm splice plates.

Solution : 4

$P = 1200 \text{ kN} = 1200 \times 10^3 \text{ N}$

$L = 10 \text{ m} = 10 \times 10^3 \text{ mm}$

Assume steel with yield stress of 250 N/mm^2.

∴ $\sigma_{at} = 0.60 \times 250 = 150 \text{ N/mm}^2$

$$\text{Net area required} = \frac{1200 \times 10^3}{150} = 8000 \text{ mm}^2$$

From I.S. Handbook No. 1, note the properties of ISMC 300 @ 351.2 N/m.

$A = 4564 \text{ mm}^2$

$I_{xx} = 6362.6 \times 10^4 \text{ mm}^4$

$I_{yy} = 310.8 \times 10^4 \text{ mm}^4$

$T = 13.6 \text{ mm}$

$r_{xx} = 118.1 \text{ mm}$

$t = 7.6 \text{ mm}$

$C_{yy} = 23.6 \text{ mm}$

$g = 50 \text{ mm}$

$B = 90 \text{ mm}$

Assume 16 mm ϕ staggered rivets for connection.

Gross diameter of rivets = 16 + 1.5 = 17.5 mm

Let us provide 2 ISMC 300 @ 351.2 N/m

Gross area of the channels provided = 2 × 4564 = 9128 mm^2

Since rivets are staggered, deduction for two rivet holes will be made in the calculation of net area.

$$\text{Net area provided} = \text{Gross area} - \text{Area of rivet holes} - \frac{1}{2}\text{web area}$$

$$= 9128 - 2 \times 17.5 \times 13.6 - \frac{1}{2}[2 \times (300 - 2 \times 13.6) \times 7.6]$$

$= 6578.72 \text{ mm}^2 < 8000 \text{ mm}^2$ (Unsafe)

As the net area provided by two channel sections is less than the net area required and thus additional cover plates are required.

Net area to be provided by plate = 8000 – 6578.72 = 1421.28 mm^2

Let us provide one additional plate of size 280 × 6 mm.

Assuming the plate to be connected with flanges of channels by 16 mm ϕ power driven rivets.

∴ Net area provided by plate = 280 × 6 – 17.5 × 6 = 1575 mm^2 > 1421.28 mm^2 (OK)

Check:

The slenderness ratio of the member should be less than 180.

Channels are placed face to face at spacing 'S' so that

$$r_{yy} \geq r_{xx}$$

$$\Rightarrow \quad I_{yy} \geq I_{xx}$$

$$\bar{y} = \frac{2\times 4564\times\left(\frac{300}{2}+6\right)+280\times 6\times\frac{6}{2}}{2\times 4564+280\times 6} = 132.22 \text{ mm}$$

But $I_{yy} = I_{xx}$

$$\Rightarrow 2\times\left[310.8\times 10^4+4564\left(\frac{S}{2}-23.6\right)^2\right]+6\times\frac{280^3}{12} = 2\times 6362.6\times 10^4+\frac{280\times 6^3}{12}+280\times 6\left(132.22-\frac{6}{2}\right)^2$$

$$+ 2\times 4564\,(156-132.22)^2$$

$$\Rightarrow \quad S = 296.7 \text{ mm} \approx 300 \text{ m}$$

Provide channels at a spacing of 300 mm and provide an additional plate 300 × 6 mm as shown in figure.

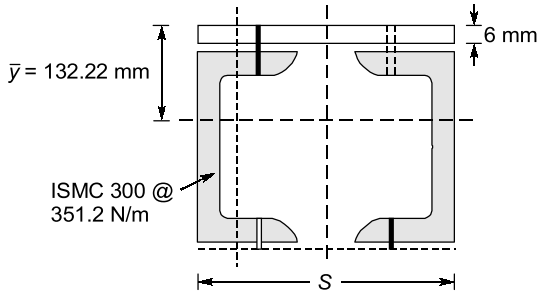

Since the section of the plate provide is increased from 280 × 6 mm to 300 × 6 mm, the net area provided will be more than net area required and does not require rechecking.

$$I_{xx} = 2\times 6362.6\times 10^4+\frac{300\times 6^3}{12}+300\times 6\left(132.22-\frac{6}{2}\right)^2+2\times 4564(156-132.22)^2$$

$$= 16247.5\times 10^4 \text{ mm}^4$$

$$A = 300\times 6+2\times 4564 = 10298 \text{ mm}^2$$

$$r_{xx} = \sqrt{\frac{I_{xx}}{A}} = \sqrt{\frac{16247.5\times 10^4}{10928}} = 121.9 \text{ mm}$$

$$\lambda = \frac{l}{r_{xx}} = \frac{10\times 10^3}{121.9} = 82 < 180 \qquad \text{(OK)}$$

Tie plate:

Effective depth of tie plate = (300 – 2 × 23.6) = 252.8 mm

Overall depth = 252.8 + 2 × 29 = 310.8 mm ≈ 312 mm

(assuming 20 mm ϕ rivets, edge distance = 29 mm)

Length of tie plate = Spacing of channels = 300 mm

$$\text{Thickness of tie plate} = \frac{1}{50}(300-2\times 50) = 4 \text{ mm} \not< 6 \text{ mm}$$

Provide 312 × 300 × 6 mm tie plates.

© Copyright

Solution : 5

Gravity loads:

Dead load from roofing = $200 \times 2 = 400$ N/m

Let, self weight of purlin = 100 N/m

Let there be no access to the roof.

$\therefore$ Live load = nil

Total gravity load = $400 + 100 = 500$ N/m

Loads normal to roof:

Wind load = $1500 \times 2 = 3000$ N/m

Component of gravity loads parallel to roof = $500 \sin 30° = 500 \times 0.5 = 250$ N/m

As the sag rods are placed at third points on purlins,

$\therefore$ Pull on sag rods = $250 \times \frac{7}{3} = 583.33$ N

Allowable axial tensile stress, $\sigma_{at} = 0.6 \times 250 = 150$ N/mm^2

$$A_{net} = \frac{583.33}{150} = 3.889 \text{ mm}^2$$

Assuming the gross area to be about 30% more than the net area.

Tentative area required, $A_{req} = 1.3 \times 3.889 = 5.056$ mm^2

The diameter of the sag rod can be obtained as follows and should not be less than 16 mm.

$$A = \frac{\pi}{4} d^2$$

$$\Rightarrow \quad d = \sqrt{\frac{4A}{\pi}} = \sqrt{\frac{4 \times 5.056}{\pi}} = 2.537 \text{ mm} \not< 16 \text{ mm}$$

Provide 16 mm diameter sag rods between purlins.

Tie rods between ridge purlins:

Pull in the tie rods = $4 \times 583.33 \sec 30° = 2694.29$ kN

$$A_{net} = \frac{2694.29}{150} = 17.96 \text{ mm}^2$$

$A_{gross} = 1.3 \times 17.96 = 23.35$ mm^2

(increasing net are by 30%)

Diameter of the rod = $\sqrt{\frac{4 \times 23.35}{\pi}} = 5.45 \text{ mm} \not< 16 \text{ mm}$

Provide 16 mm diameter tie rods between ridge purlins.

■■■■

3 Compression Member

LEVEL 1 Objective Questions

1. (b)
2. (d)
3. (c)
4. (50)
5. (a)
6. (d)
7. (a)
8. (21.21)
9. (b)
10. (c)

LEVEL 2 Objective Questions

11. (d)
12. (a)
13. (c)
14. (a)
15. (19.6)
16. (c)
17. (c)
18. (c)

LEVEL 3 Conventional Questions

Solution : 1

273.1 kN

Solution : 2

0.0108%

Solution : 3

P = 33.58 kN

Solution : 4

1046.4 kN

Solution : 5

378.6 kN

© Copyright: Subject matter to MADE EASY Publications, New Delhi. No part of this book may be reproduced or utilised in any form without the written permission.

4 Beams

LEVEL 1 Objective Questions

1. (c)
2. (295.235)
3. (43.3)
4. (1760)
5. 62.5

© Copyright: Subject matter to MADE EASY Publications, New Delhi. No part of this book may be reproduced or utilised in any form without the written permission.

LEVEL 2 Objective Questions

6. (c)
7. (75.01)
8. (121.22)
9. (31.43)
10. (d)
11. (d)

LEVEL 3 Conventional Questions

Solution : 1

$$\text{Factored live load will be} = 1.5 \times 25$$
$$= 37.5 \text{ kN/m}$$
$$\text{Factored dead load will be} = 1.5 \times 0.377 \text{ kN/m}$$
$$= 0.565 \text{ kN/m}$$
$$\text{Total factored load will be} = 37.5 + 0.565$$
$$w_u = 38.06 \text{ kN/m}$$
$$\text{Service load will be } w = \frac{38.06}{1.5} = 25.38 \text{ kN/m}$$

1. Check for flexure:

$$Z_{\text{available}} \text{ (Elastic section modulus)} = \frac{I_{xx}}{y}$$
$$= \frac{7332.9 \times 10^4}{150} = 0.488 \times 10^6 \text{ mm}^3$$

$$Z_{\text{req.}} \text{ (Elastic section modulus)} = \frac{M}{\left(\frac{f_y}{1.1}\right)}$$
$$= \frac{w_u l^2/8}{\left(\frac{f_y}{1.1}\right)} = \frac{\frac{38.06 \times (5)^2}{8} \times 10^6}{\left(\frac{250}{1.1}\right)} = 0.523 \times 10^6 \text{mm}^3 < Z_{available}$$

Amount of area required, by providing cover plates is,

$$A = \frac{Z_{\text{req.}} - Z_{\text{available}}}{D} = \frac{(0.523 \times 10^6) - (0.488 \times 10^6)}{300}$$
$$= 116.6 \text{ mm}^2$$

Providing two cover plates of 50 mm × 8 mm size.

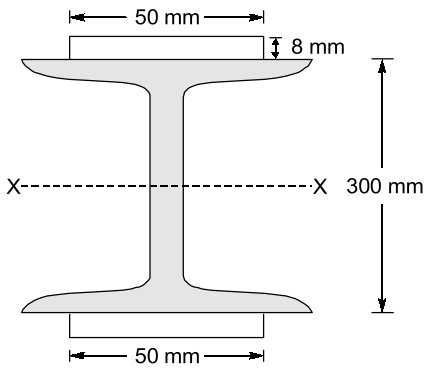

ISLB 300

© Copyright

$$(I_{xx})_{comb} = (I_{xx})_{ISLB} + 2\left[\frac{50\times(8)^3}{12} + (50\times 8)\times(154)^2\right]$$

$$= 7332.9\times 10^4 + 2\left[\frac{50\times(8)^3}{12} + (50\times 8)\times(154)^2\right]$$

$$= 92.31\times 10^6 \text{ mm}^4$$

$$(Z_{xx})_{new} = \frac{(I_{xx})_{comb.}}{y} = \frac{92.31\times 10^6}{158} = 584.24\times 10^3 \text{ mm}^3$$

$$(Z_{xx})_{new,\,Provided} > Z_{required} \quad \text{(OK)}$$

2. **Check for shear:**

$$\text{Shear stress will be, } f_1 = \left(\frac{V}{D\cdot t_w}\right)$$

$$= \frac{wl/2}{D\cdot t_w} = \frac{\frac{38.06\times 5}{2}\times 10^3}{300\times 10} = 31.72 \text{ N/mm}^2$$

$$\le \left(\frac{f_y}{1.1\times\sqrt{3}} = \frac{250}{1.1\times\sqrt{3}} = 131.22 \text{ MPa}\right) \quad \text{(OK)}$$

3. **Check for deflection:**

Deflection of beam will be, $\delta_1 = \frac{5}{384}\frac{wl^4}{EI}$

$$\therefore \quad \delta_1 = \frac{5}{384}\times\frac{\left(\frac{38.06}{1.5}\right)\times(5)^4}{2\times 10^5\times 92.31\times 10^6}\times(10^3)^4 = 11.18 \text{ mm}$$

Maximum deflection as per limit state of serviceability

$$\delta_{max} = \frac{l}{300} = \frac{5000}{300} = 16.67 \text{ mm}$$

$$\therefore \quad \delta_1 < \delta_{max}$$

Solution : 2

Section is safe against bending and shear.

Solution : 3

193.43 kNm

■■■■

5 Plate Girders and Industrial

LEVEL 1 Objective Questions

1. (b)
2. (c)
3. (b)
4. (a)
5. (a)
6. (c)
7. (20)
8. (c)

© Copyright: Subject matter to MADE EASY Publications, New Delhi. No part of this book may be reproduced or utilised in any form without the written permission.

LEVEL 2 Objective Questions

9. (d)
10. (62.5)
11. (a)
12. (c)
13. (d)
14. (b)
15. (a)
16. (a)

6 Plastic Analysis

LEVEL 1 Objective Questions

1. (2.03)
2. (40.05)
3. (b)
4. (d)
5. (a)
6. (1.78)
7. (b)
8. (1.33)
9. (3.33)
10. 1.529)
11. (30)

LEVEL 2 Objective Questions

12. (b)
13. (d)
14. (c)
15. (c)
16. (a)
17. (b)
18. (a)
19. (c)
20. (250)
21. (a)
22. (2)
23. (a)
24. (b)
25. (0.75)

LEVEL 3 Conventional Questions

Solution : 1

3.73 kNm

Solution : 2

33.75 kNm

Solution : 3

$0.6\,P_u a, \quad 1.2\,P_u a$

Solution : 4

1.707

Solution : 5

$$\text{Collapse load} = \frac{5M_P}{L}$$

Solution : 6

1.5

Solution : 7

8

Solution : 8

$12.75\,M_p/L$

Solution : 9

$213320\,mn^3$

Solution : 10

55 kN, 60 kN

Solution : 11

$14.22\,M_p/L$

Solution : 12

$$\frac{15}{4}\frac{M_p}{L}$$

Solution : 13

68.9 kNm

■■■■

© Copyright