MADE EASY

India's Best Institute for IES, GATE & PSUs

Detailed Solutions

SSC-JE 2018 Mains Test Series (PAPER-II)

Mechanical Engineering Test No : 2

Q.1 (a) Solution:

1. Let us first consider a cyclic heat pump P which transfers heat from a low temperature reservoir (t_2) to a high temperature reservoir(t_1) with no other effect, i.e., with no expenditure of work, violating Clausius statement.

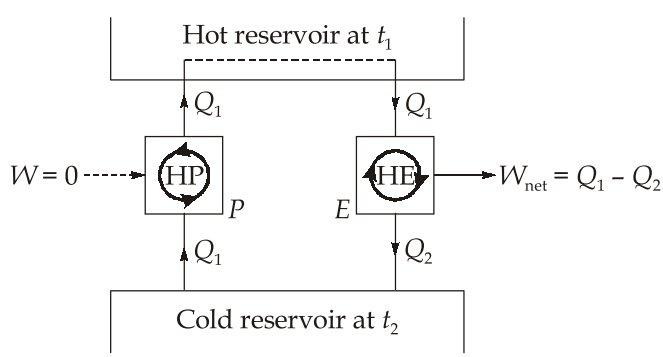

Violation of the Clausius statement

Let us assume a cyclic heat engine E operating between the same thermal energy reservoirs, producing W_{net} in one cycle. The rate of working of the heat engine is such that it draws an amount of heat Q_1 from the hot reservoir equal to that discharged by the heat pump. Then the hot reservoir may be eliminated and the heat Q_1 discharged by the heat pump is fed to the heat engine. So we can see that the heat pump P and the heat engine E acting together constitute a heat engine operating in cycles and producing net work while exchanging heat only with one body at a single fixed temperature (t_2). This violates the Kelvin-Planck statement.

2. Let us now consider a perpetual motion machine of the second kind (E) which produces net work in cycle by exchanging heat with only one thermal energy reservoir (at t_1) and thus violates the Kelvin-Planck statement.

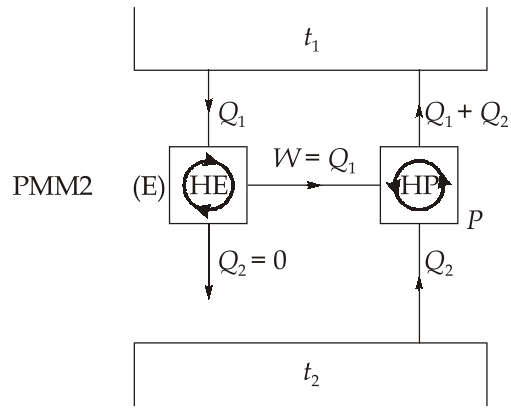

Violation of the Kelvin-Planck statement

Let us assume a cyclic heat pump P extracting heat Q_2 from a low temperature reservoir at t_2 and discharging heat to the high temperature reservoir at t_1 with the expenditure of work W equal to what the PMM2 delivers in a complete cycle. So E and P together constitute a heat pump working in cycle and producing the sole effect of transferring heat from a lower to a higher temperature body, thus violating the Clausius statement.

Q.1 (b) Solution:

Efficiency of the cycle is given by

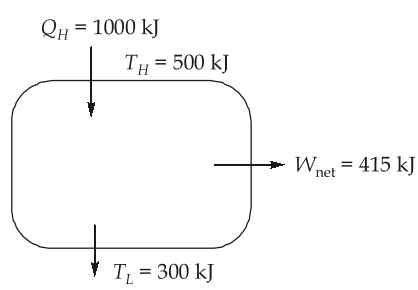

$$\eta_{th} = \frac{W_{net}}{Q_H} = \frac{415}{1000} = 0.415 \text{ or } 41.5\%$$

The maximum efficiency that any cycle can have while operating between T_H = 500 K and T_L = 300 K is given by the Carnot efficiency.

$$\eta_{max} = 1 - \frac{T_L}{T_H} = 1 - \frac{300}{500} = 0.40 \text{ or } 40\%$$

Since $\eta_{th} > \eta_{max}$, the claim is not feasible.

Q.1 (c) Solution:

Initial conditions:

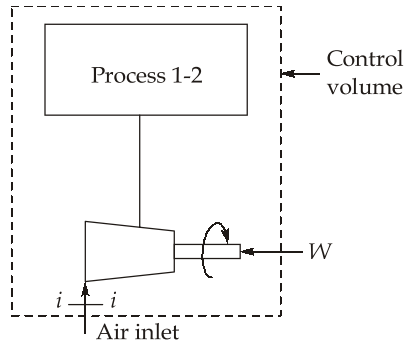

$$v_1 = 2 \text{ m}^3$$
$$T_1 = 25°\text{C} = (25 + 273)\text{K} = 298 \text{ K}$$
$$P_1 = 1 \text{ atm} = 101.325 \text{ kPa}$$
$$\text{Final mass: } m_2 = 5 \text{ m}_1$$

Assumptions:

1. Adiabatic process: $Q = 0$
2. Change in kinetic and potential energy are negligible.

$$\text{Initial mass, } m_1 = \frac{P_1V_1}{RT_1} = \frac{101.325\times 2}{0.287\times 298}$$
$$m_1 = 2.3694 \text{ kg}$$
$$m_2 = 5\, m_1$$
$$m_2 = 11.847 \text{ kg}$$

For process 1 – 2 constant volume process,

$$\frac{P_1}{m_1T_1} = \frac{P_2}{m_2T_2} \qquad \text{[Volume of tank = constant]}$$
$$\frac{101.325}{298} = \frac{P_2}{5T_2}$$
$$P_2 = 1.7\, T_2$$

For adiabatic filling tank,

$$\frac{T_2}{T_1} = \left(\frac{P_2}{P_1}\right)^{\frac{\gamma-1}{\gamma}}$$
$$\frac{T_2}{298} = \left(\frac{1.7T_2}{101.325}\right)^{1.4-1/1.4}$$
$$T_2 = 298\left(\frac{1.7T_2}{101.325}\right)^{1.4-1/1.4}$$

$$(T_2)^{1-0.4/1.4} = 298\left(\frac{1.7}{101.325}\right)^{\frac{0.4}{1.4}}$$

$$T_2 = 567.28 \text{ K}$$

Now, $$\left(\frac{dm}{dt}\right)_{cv} = \dot{m}_i - \dot{m}_e$$

$$m_2 - m_1 = m_i \qquad \text{(no exit mass, } \dot{m}_e = 0)$$

and, $$U_2 - U_1 = \dot{m}_i h_i + \dot{Q} - \dot{m}_e h_e - \dot{W}_{cv}$$

No heat transfer, $\dot{Q} = 0$, $\dot{m}_e = 0$

$$m_2 c_v T_2 - m_1 c_v T_1 = \dot{m}_i h_i - W_{cv}$$

$$(11.847 \times 567.28 - 2.3694 \times 298) \times 0.718 = (11.847 - 2.3694) \times 1.005 \times 298 - W_{cv}$$

$$W_{cv} = -1479.953 \text{ kW}$$

Negative sign indicates work supplied to the control volume.

Q.1 (d) Solution:

Given: $V_1 = 1 \text{ m}^3$, $P_1 = 1.5$ bar, $T_1 = 20°\text{C} = 273 + 20 = 293$ k, $P_2 = 6$ bar, $T_2 = 120°\text{C} = 273 + 120 = 399$ k

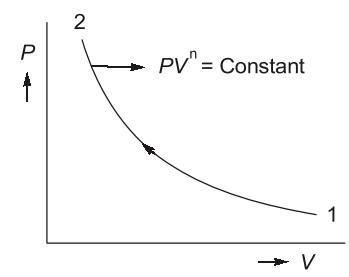

(i) $$\frac{T_2}{T_1} = \left(\frac{P_2}{P_1}\right)^{\frac{n-1}{n}}$$

or $$\frac{n-1}{n}\ln\left(\frac{P_2}{P_1}\right) = \ln\left(\frac{T_2}{T_1}\right)$$

or $$\frac{n-1}{n} = \frac{\ln(T_2/T_1)}{\ln(P_2/P_1)} = \frac{\ln(393/293)}{\ln(6/1.5)} = 0.2118$$

or $$1 - \frac{1}{n} = 0.2118$$

or $$\frac{1}{n} = 0.7882$$

or $$n = 1.2687$$

(ii) $$m = \frac{P_1 V_1}{R T_1} = \frac{1.5 \times 10^5 \times 1}{287 \times 293} = 1.784 \text{ kg}$$

$$\text{Work done (W)} = \frac{P_1V_1 - P_2V_2}{n-1} = \frac{mR(T_1 - T_2)}{n-1}$$

$$W = \frac{1.784 \times 0.287(293 - 393)}{(1.2687 - 1)} = -190.54 \text{ kJ}$$

$$Q = \Delta U + W = mC_v(T_2 - T_1) + W$$

$$Q = 1.714 \times 0.718(393 - 293) - 190.54 = -61 \text{ kJ}$$

(iii)
$$S_2 - S_1 = \frac{(n-\gamma)}{(\gamma-1)(n-1)} mR \ln\frac{T_2}{T_1}$$

$$= \frac{(1.2687 - 1.4)}{0.4 \times 0.2687} \times 1.784 \times 0.287 \ \ln\frac{393}{293}$$

$$S_2 - S_1 = -0.18366 \text{ kJ/K}$$

Q.2 (a) Solution:

The oxidation catalytic converters converts CO and HC to CO_2 and H_2O at substantially low temperatures and at higher conversion efficiency than the thermal reactors.

Catalytic converters are chambers mounted in the flow system through which the exhaust gases pass through. These chambers contain catalytic material, which promotes the oxidation of the emissions contained in the exhaust flow. Generally, they are called three-way converters because they are used to reduce the concentration of CO, HC and NOx in the exhaust.

It is usually a stainless steel container mounted along the exhaust pipe of engine. Inside the container is a porous ceramic structure through which exhaust gas flows. In most converters, the ceramic is a single honey comb structure with many flow passages. Catalytic converters for CI engines need larger flow passages because of the solid soot in the exhaust gases.

The surface of the ceramic passages contain small embedded particles of catalytic material that promote the oxidation reactions in the exhaust gas as it passes.

Aluminium oxide (Alumina) is the base ceramic material used for most catalytic converters. The catalyst material most used are Platinum, Palladium and Rhodium. Palladium and Platnium promote the oxidation of CO and HC and Rhodium promotes the reduction of NOx.

Q.2 (b) Solution:

$$\text{The maximum COP} = \frac{T_e}{T_g}\left(\frac{T_g - T_c}{T_c - T_e}\right)$$

where, T_g = Saturation temperature of steam at 2 bar

= 119.62°C = 392.62 K

$$T_c = 30 + 273 = 303 \text{ K}$$

$$T_e = -5 + 273 = 268 \text{ K}$$

$$\text{Maximum COP} = \frac{268}{392.62}\left(\frac{392.62 - 303}{303 - 268}\right) = 1.75$$

$$\text{Actual COP} = 1.75 \times 0.7 = 1.225$$

$$\text{20 tons load of refrigeration} = 20 \times 3.5 = 70 \text{ kJ/s}$$

$$\text{Actual COP} = \frac{\text{Refrigeration load}}{\text{Actual heat supplied}}$$

$$\therefore \quad \text{Actual heat supplied} = \frac{70}{1.225} = 57.15 \text{ kJ/ s} = 57.15 \text{ kW}$$

$$\text{Steam required per hour} = \frac{57.15 \times 3600}{x \cdot h_{fg}}$$

$$\text{Steam requirement/hour} = \frac{57.15 \times 3600}{0.9 \times 2200} = 103.91 \text{ kg/ hour}$$

Note: Only latent heat of steam is used for heating purposes.

Q.2 (c) Solution:

1. **LaMont Boiler:** This boiler works on a forced circulation and the circulation is maintained by a centrifugal pump, driven by a steam turbine using steam from the boiler. The following figure shows a LaMont boiler. The feed water passes through the economiser to the drum from which it is drawn to the circulation pump. The pump delivers the feed water to the tube evaporating section which in turn sends a mixture of steam and water to the drum. The steam in the drum is then drawn through the superheater. These boilers have been built to generate 45 to 50 t/h of superheated steam at 130 bar and 500°C.

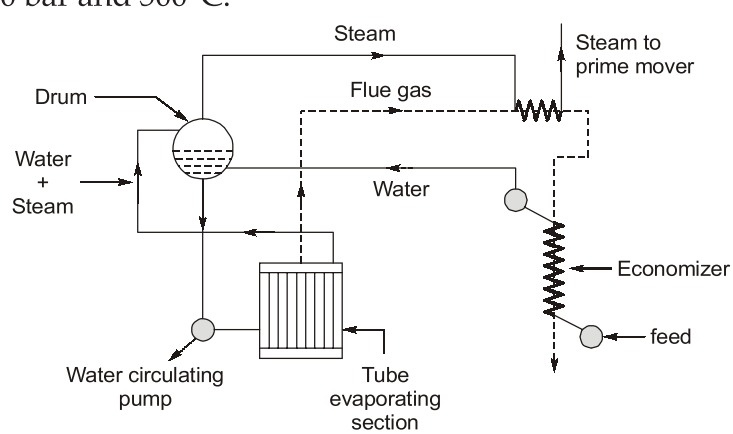

La Mont Boiler

2. **Velox Boiler:** Velox boiler makes use of pressurised combustion. The gas turbine drives the axial flow compressor which raises the incoming air from atmospheric pressure to furnace pressure. The combustion gases after heating the water and steam, flow, through the gas turbine to the atmosphere. The feed water after passing through the economiser is pumped by a water circulating pump to the tube evaporating section. Steam separated in steam separating section flows to the superheater, from where it moves to the prime mover.

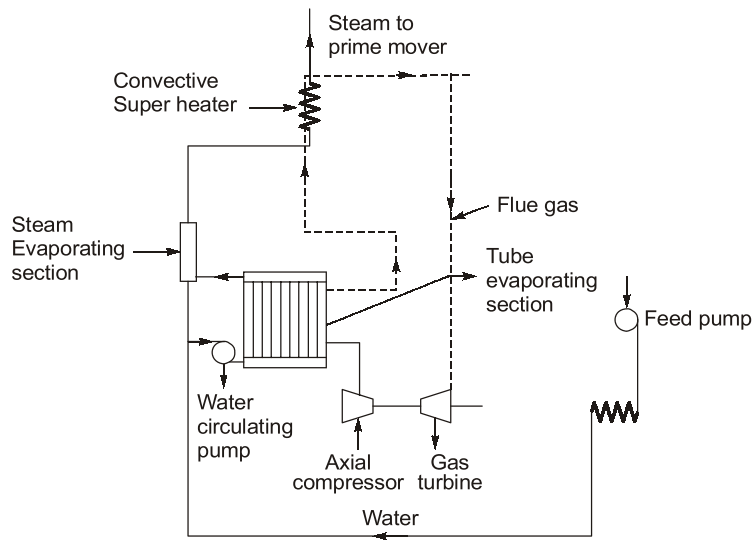

Velox Boiler

The size of the velox boiler is limited to 100 t/h because 600 BHP is required to run the air compressor at this output.

Advantage of velox boiler:

(i) The boiler is very compact and greater flexibility.

(ii) Very high combustion rates are possible.

(iii) It can be quickly started.

(iv) Low excess air is required as the pressurised air is used and the problem of draught is simplified.

Q.2 (d) Solution:

Given;Total isentropic enthalpy drop

$$\Delta h_{isen} = 1400 \text{ kJ/kg}$$

$$\text{Mean blade velocity, } U = 220 \text{ m/s}$$

$$\text{Nozzle efficiency, } \eta_n = 0.91$$

$$\text{Nozzle angle, } \alpha_1 = 20°$$

All simple impulse stages

Condition for maximum efficiency,

$$\rho = \frac{U}{V_1} = \frac{\cos\alpha_1}{2} = \frac{\cos 20°}{2} = 0.46984$$

or
$$V_1 = \frac{U}{0.46984} = \frac{220}{0.46984} = 468.24 \text{ m/s}$$

Neglecting initial K.E. at the nozzle inlet, the nozzle velocity at exit is given by

$$V_1 = 44.72\sqrt{(\Delta h_{\text{isen}})_{\text{stage}} \times \eta_n}$$

$$468.24 = 44.72\sqrt{(\Delta h_{\text{isen}})_{\text{stage}} \times 0.91}$$

or
$$(\Delta h_{\text{isen}})_{\text{stage}} = 120.47 \text{ kJ/kg} \quad ...(1)$$

The number of simple impulse stages requires is

$$n = \frac{\Delta h_{\text{isen}}}{(\Delta h_{\text{isen}})_{\text{stage}}} = \frac{1400}{120.47} = 11.621 \simeq 12 \text{ stages}$$

Q.3 (a) Solution:

1. As per information,

Mass of double edge blade = 0.64×10^{-3} kg

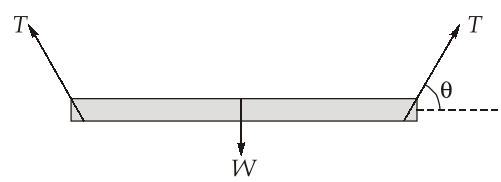

Total length (both edge) of blade side = 206 mm

Weight of double edge blade = $W = mg = 0.64 \times 10^{-3} \times 9.81$

$= 6.2784 \times 10^{-3}$ N

$\sigma_{\text{water}} = 7.34 \times 10^{-2}$ N/m

$T = \sigma_{\text{water}} \times$ total length of edge

$= 7.34 \times 10^{-2} \times 206 \times 10^{-3}$

$T = 0.0151204$ N

For $\Sigma F_V = 0$, Weight = $T\sin\theta$ ... (i)

$6.2784 \times 10^{-3} = T\sin\theta$

$$\sin\theta = 0.415227$$

$$\theta = 24.533°$$

2. Total length of single edge blade = 154 mm

$$\text{Mass of single edge blade} = 2.61 \times 10^{-3} \text{ kg}$$

$$\text{Weight of single edge blade} = 2.61 \times 10^{-3} \times 9.81 \text{ N} = 0.02560 \text{ N}$$

$$T = \sigma_{water} \times \text{total length of edge}$$

$$= 7.34 \times 10^{-2} \times 0.154 = 0.0113036 \text{ N}$$

For $\Sigma F_V = 0$, $\quad \text{Weight} = T\sin\theta \quad$ ... (i)

$$0.02560 = 0.0113036\sin\theta$$

$$\sin\theta = 2.2647 \text{ (which is impossible)}$$

In order to float, $\quad \text{Weight} < T\sin\theta$

Since maximum value for ($\sin\theta = 1$).

It means Weight > $T\sin\theta$ and single edge blade will definitely sink.

Q.3 (b) Solution:

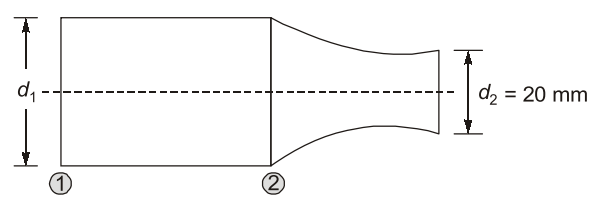

Given data are:

$$d_1 = 40 \text{ mm}, \qquad d_2 = 20 \text{ mm}$$

$$Q = 1.2 \text{ m}^3/\text{min}$$

$$Q = \frac{1.2}{60} \text{ m}^3/s = \frac{1}{50} \text{m}^3/\text{s} = 0.02 \text{ m}^3/\text{s}$$

$$v_1 = \frac{4Q}{\pi d_1^2} = \frac{4 \times 0.02}{3.14 \times (0.04)^2} = 15.92 \text{m/s}$$

$$v_2 = 4v_1 = 63.68 \text{ m/s}$$

Force exerted by nozzle on water

$$= \dot{m}(v_2 - v_1) = \rho Q(v_2 - v_1)$$

$$\therefore \quad F = 1000 \times 0.02\,(63.68 - 15.92) = 955.2 \text{ N}$$

Q.3 (c) Solution:

Given : Scale ratio (L_r) = 10, P_m = 1.84 kW, H_m = 5 m, N_m = 480 rpm, H_p = 40 m

$$\frac{H_m}{D_m^2 N_m^2} = \frac{H_p}{D_p^2 N_p^2}$$

$$N_p^2 = \left(\frac{H_p}{H_m}\right)\left(\frac{D_m}{D_p}\right)^2 \times N_m^2$$

$$N_p = \sqrt{\frac{H_p}{H_m}}\left(\frac{D_m}{D_p}\right) \times N_m$$

$$N_p = \sqrt{\frac{40}{5}} \times \left(\frac{1}{10}\right) \times 480 = 135.76 \text{ rpm}$$

$$\frac{P_m}{D_m^2 H_m^{3/2}} = \frac{P_p}{D_p^2 H_p^{3/2}}$$

$$P_p = 1.84 \times \left(\frac{10}{1}\right)^2 \times \left(\frac{40}{5}\right)^{3/2} = 4163.4 \text{ kW}$$

$$(N_s)_m = \frac{N_m\sqrt{P_m}}{H_m^{5/4}} = \frac{480\sqrt{1.84}}{(5)^{5/4}} = 87.08 \text{ units}$$

$$(N_s)_p = \frac{N_p\sqrt{P_p}}{H_p^{5/4}} = \frac{135.76\sqrt{4163.4}}{(40)^{5/4}} = 87.08 \text{ units}$$

Thus, $(N_s)_m = (N_s)_p$

We can observe that specific speeds are same for model and prototype. This is the speed of a member of the same homologous series as the actual turbine, so reduced in size as to generate unit power under a unit head of the fluid.

Q.3 (d) Solution:

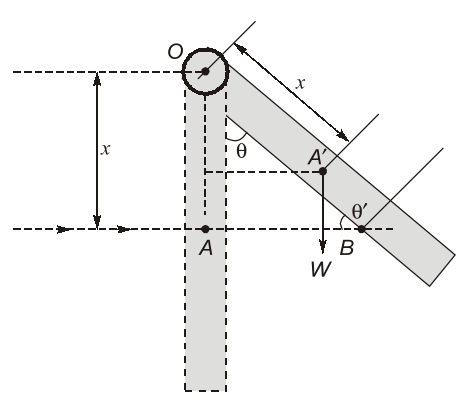

Here, Assume, x = distance of the centre of jet from hinge 0

θ = angle of swing about hinge

W = weight of plate acting of C.G. of plate

1. Force due to jet of water, normal to the plate

$$F_n = \rho a V^2 \sin\theta'$$

Here, θ' = angle between jet and plate = $90 - \theta$

2. Weight of the plate, W

Moment of force F_n about hinge = $F_n \times OB = \rho a V^2 \sin(90 - \theta) \times OB$

$$= \rho a V^2 \cos\theta \times OB \quad \text{...(i)}$$

Now, from the figure above,

$$OB = \frac{OA}{\cos\theta} = \frac{x}{\cos\theta} \quad \text{...(ii)}$$

From equation (i) and (ii)

$$F_n = \rho a V^2 . x$$

For equilibrium of the plate,

Moment of weight W about hinge, i.e. ($W \times OA' \sin\theta$) should be equal to moment due to F_n, i.e,

$$\rho a V^2 . x = W \times x \times \sin\theta$$

$$\sin\theta = \frac{\rho a V^2}{W}$$

$$\Rightarrow \quad \theta = \sin^{-1}\left(\frac{\rho a V^2}{W}\right)$$

Q.4 (a) Solution:

Annealing : Annealing is the heating of steel to austenizing temperature and then cooling slowly in the furnace.

The purpose of annealing is :

1. To reduce hardness
2. To improve machinability
3. To increase or to restore ductility
4. To relieve internal stresses
5. To reduce or eliminate structural inhomogeneity
6. To refine grain size
7. To prepare steel for subsequent heat treatment.

Slow cooling results in the formation of spheroidal carbide and (coarse) lamellar pearlite. These products are very soft. The cooling rate during annealing varies depending upon the alloying elements in the steel and lower rate of cooling is used for alloy steels as compared to plain C-steels. Annealing results in the formation of ferrite, spheroidal element and coarse pearlite. All these phases and micro - constituents are relatively soft and therefore this is known as softening treatment and produces relatively lower hardness values will ductility increases.

- **Full Annealing :** Primary objective of this process is to reduce hardness and increase ductility.

  The process involves :

(a) Heating the steel to about 50° to 75°C above the upper critical temperature for hypoeutectoid steels and about 50° to 75°C above the lower critical temperature for hyper eutectoid steel.

(b) Holding at this temperature for a sufficient time depending upon the thickness of object the holding time is 3 - 4 min/mm of thickness of the largest sections.

(c) Followed by slow cooling in the furnace. The rate of cooling varies from 30°C - 200°C per hour depending upon the composition and stability of austenite.

Q.4 (b) Solution:

Closed-die Forging. Also referred to as impression-die forging. However, in true closed-die forging, flash does not form , and the work piece completely fills the die cavity. Consequently, the forging pressure is very high, and accurate control of the blank volume and proper die design are essential for producing a forging with the desired dimensional tolerances. Undersized blanks prevent the complete filling of the die cavity; conversely, oversized blanks generate excessive pressures and may cause dies to fail prematurely or the machine to jam. Regardless, the term closed-die forging is often applied to impression die forging with flash generation, whereas open-die forging generally applies to operations with simple dies and tooling and with large deformations.

Precision Forging. Typical precision-forged products are gears, connecting rods, and turbine blades. Precision forging requires special and more complex dies, precise control of the blank's volume and shape, and accurate positioning of the blank in the die cavity. Also, because of the higher forces required to obtain fine details on the part, this process requires higher capacity equipment. Aluminum and magnesium alloys are particularly suitable for precision forging because of the relatively low forging loads and temperatures that they require; however, steels and titanium also can be precision forged.

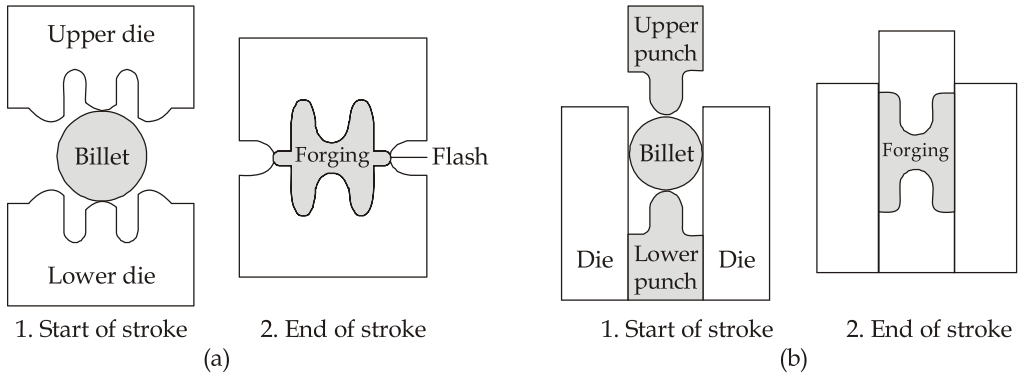

Comparison of (a) closed-die forging with flash and (b) precision or flashless forging of a round billet.

Q.4 (c) Solution:

The ease with which a given material may be worked with a cutting tool is machinability. Factors that affect the machinability are

(i) Tool life

(ii) Surface finish

(iii) Cutting forces

Tool life: The longer the tool life at a given speed better is the machinability

Surface Finish: Two materials are machined under identical cutting conditions and material which produces good finish is considered to be more machinable material.

Cutting forces: The material which required smaller cutting force is more machinable.

Q.4 (d) Solution:

Functions of flux coating:

1. Flux coating material may act as deoxidizers.
2. Flux coating material by forming the slag, protect liquid metal from the atmospheric gases.
3. Flux coating material increases the strength of the joint by adding alloying element.
4. Flux coating material control the viscosity of liquid metal and heat transfer rate in the weld pool.
5. Flux coating material by reducing the arc blow increases the stability of the arc.
6. Flux coating material by reducing the heat transfer losses increases the heat concentration on the workpiece.

Flux coating materials:

i. **De-oxidizing material**: Graphite, Alumina, Ferro silicon and Ferro manganese.

ii. **Slag formation compounds**: Iron oxide, Silicon dioxide, Titanium oxide, Silica flour and Calcium fluoride.

iii. **Arc stabilizer**: Sodium oxide, Calcium oxide, Potassium silicate.

iv. **Alloying elements**: Chromium, Nickel, Cobalt and Vanadium.

Q.5 (a) Solution:

Work done per second = 56000 J = 56000 N.m

Number of working strokes per minute = 2 × 240 = 480

$$\text{Work done/stroke} = \frac{\text{Work done per second}}{\text{Number of working stroke/second}}$$

$$= \frac{56000}{480/60} = 7000\,\text{N.m}$$

Fluctuation of energy = 0.3 × 7000 = 2100 N.m

$$C_S = \frac{\omega_1 - \omega_2}{\omega} = \frac{(1.01 - 0.99)\omega}{\omega} = 0.02$$

$$\Delta E = I\omega^2 K = mK^2\,\omega^2 C_S$$

$$\omega = \frac{2\pi N}{60} = 2\pi \times 4 = 8\pi = 25.13\ \text{rad/s}$$

$$\text{Mass of flywheel, } m = \frac{2100}{0.5^2 \times 25.13^2 \times 0.02} = 665.06\,\text{kg}$$

Q.5 (b) Solution:

$$m = 4\ \text{kg},\ M = 24\ \text{kg},\ f = 18\ \text{N}$$

$$\text{At minimum speed, } h = \sqrt{200^2 - 120^2} = 160\ \text{mm}$$

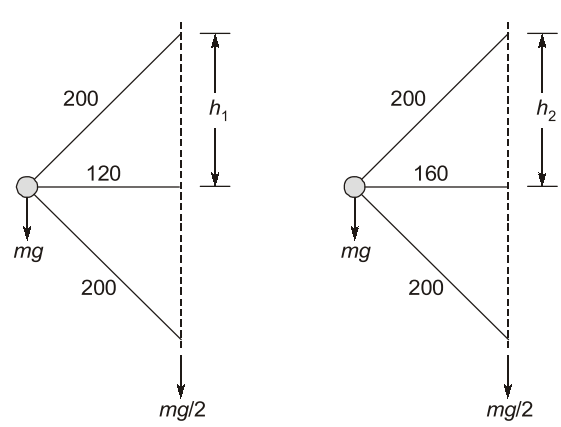

As $k = 1, f = 0$

$$N^2 = \frac{895}{h}\left(\frac{m+M}{m}\right) = \frac{895}{0.16}\left(\frac{4+24}{4}\right) = 39156$$

or $N = 197.9$ rpm

As $k = 1, f = 0,$

$$N^2 = \frac{895}{h}\left(\frac{m+M}{m}\right) = \frac{895}{0.12}\left(\frac{4+24}{4}\right) = 52208$$

or $N = 228.5$ rpm

Range of speed = 228.5 – 197.9 = 30.6 rpm

When friction at the sleeve is 18 N

At minimum speed,

$$N^2 = \frac{895}{h}\left(\frac{mg+(Mg-f)}{mg}\right)$$

$$= \frac{895}{0.16}\left(\frac{4\times 9.81+(24\times 9.81-18)}{4\times 9.81}\right) = 36590$$

or $N = 191.3$ rpm

At maximum speed,

$$N^2 = \frac{895}{h}\left(\frac{mg+(Mg-f)}{mg}\right)$$

$$= \frac{895}{0.12}\left(\frac{4\times 9.81+(24\times 9.81-18)}{4\times 9.81}\right) = 55630$$

or $N = 235.9$ rpm

Range of speed = 235.9 – 191.3 = 44.6 rpm

Q.5 (c) Solution:

Given, $P = 12$ kW, $m_1 = 20$ kg, $R_1 = 80$ mm, $m_2 = 35$ kg, $R_2 = 120$ mm, $N_1 = 2000$ rpm

$$I_1 = m_1R_1^2 = 20 \times 0.08^2 = 0.128 \text{ kg-m}^2$$

$$I_2 = m_2R_2^2 = 35 \times 0.120^2 = 0.504 \text{ kg-m}^2$$

$$\omega_1 = \frac{2\pi N_1}{60} = 209.44 \text{ rad/s}$$

$$\text{Torque, } T = \frac{P\times 60}{2\pi N} = \frac{12\times 10^3\times 60}{2\pi\times 2000} = 57.295 \text{ Nm}$$

1. Time required to bring the output shaft to the rated speed from rest

$$t = \frac{(\omega_1 - \omega_2) I_1 I_2}{(I_1 + I_2) T} \qquad \text{(where, } \omega_2 = 0\text{)}$$

$$t = \frac{(209.44 - 0) \times 0.128 \times 0.504}{(0.128 + 0.504) \times 57.295} = 0.373 \text{ s}$$

2. Heat generated during clutching:

$$E = \frac{1}{2} \frac{(\omega_1 - \omega_2)^2 I_1 I_2}{(I_1 + I_2)} = \frac{1}{2} \frac{(209.44 - 0)^2 \times 0.128 \times 0.504}{(0.128 + 0.504)}$$

$$E = 2238.786 \text{ J}$$

Q.5 (d) Solution:

Equivalent load for complete work cycle:

Element No.	P(N)	Element time	Speed(rpm)	Revolution N in element time
1	$2000 - (P_1)$	0.25	500	$125 - (N_1)$
2	$3000 - (P_2)$	0.5	500	$250 - (N_2)$
3	$2500 - (P_3)$	0.25	400	$100 - (N_3)$

So, equivalent load, $P_e = \sqrt[3]{\dfrac{N_1 P_1^3 + N_2 P_2^3 + N_3 P_3^3}{N_1 + N_2 + N_3}} = 2696.44$ N

L_{10} life corresponding to 90% reliability or R_{90}

$$\left(\frac{L_{15}}{L_{10}}\right) = \left(\frac{\log_e \dfrac{1}{R_{85}}}{\log_e \dfrac{1}{R_{90}}}\right)^{1/b}$$

where, L_{15} = Life corresponding to 85% reliability

L_{15} = 5 million rev.

$b = 1.17$

So,

$$\left(\frac{5}{L_{10}}\right) = \left(\frac{\log_e \dfrac{1}{0.85}}{\log_e \dfrac{1}{0.90}}\right)^{1/1.17}$$

L_{10} = 3.452 million revolution

$$\left(\frac{C}{P_e}\right)^3 = (L_{10})$$

Dynamic load capacity, $C = 4075.18$ N

Q.6 (a) Solution:

Here only the magnitude remains same but direction changes and hence velocity changes.

Let initial velocity be $\vec{V_1}$ and final be $\vec{V_2}$

$$\left|\vec{V_1}\right| = \left|\vec{V_2}\right| = V = 1000 \text{ km/hr}$$

$$\text{Change in velocity} = \vec{V_1} - \vec{V_2}$$

$$= \vec{V_1} + (-\vec{V_2}) = \text{resultant of } \vec{V_1} \text{ and } (-\vec{V_2})$$

$$= \sqrt{V_1^2 + V_2^2 + 2V_1V_2\cos(180-\theta)}$$

$$= \sqrt{V_1^2 + V_2^2 - 2V_1V_2\cos\theta} = \sqrt{V^2 + V^2 - 2V^2\cos\theta}$$

$$= \sqrt{2V^2 - 2V^2\cos\theta} = \sqrt{2}V\sqrt{1-\cos\theta}$$

$$= \sqrt{2}\,V\sqrt{1-1+2\sin^2\frac{\theta}{2}} = \sqrt{2}\,V\,\sqrt{2}\sin\frac{\theta}{2} = 2V\sin\frac{\theta}{2}$$

$$\text{Change in velocity} = 2\times1000\times\sin\frac{60^\circ}{2} = 1000 \text{ km/hr}$$

Q.6 (b) Solution:

$$t = 10 - 0 = 10\text{s}$$

$$\theta = \omega_0 t + \frac{1}{2}(-\alpha)(t^2)$$

$$800\pi = \omega_0(10) - \frac{1}{2}(\alpha)(10^2)$$

$$= 10\omega_0 - 50\alpha \qquad \text{(–ve due to retardation) ... (i)}$$

Also, for $t = 8 - 0 = 8\text{s}$,

$$\omega = 32\pi \text{ rad/s}$$

$$\Rightarrow \quad \omega = \omega_0 + (-\alpha)(t)$$

$$32\pi = \omega_0 - 8\alpha \qquad \text{... (ii)}$$

Solving, Eqs. (i) and Eqs. (ii)

$$\omega_0 = 160\pi \text{ rad/s}$$

$$\alpha = 16\pi \text{ rad/s}^2$$

2. Total time taken to stop = T

$$\omega = \omega_0 + \alpha t$$

$$\Rightarrow \quad 0 = (160\pi) + (-16\pi)(T)$$

$$\Rightarrow \quad T = 10\text{s}$$

3. Total revolutions, $\theta = \omega_0 t + \frac{1}{2}\alpha t^2 = (160\pi)(10) + \frac{1}{2}(-16\pi)(10^2) = 800\,\pi$ rad

Number of revolution $= \frac{800\pi}{2\pi} = 400$ rev.

Q.6 (c) Solution:

- There is variation in strength, composition and dimension during manufacturing of a part.
- Residual stresses can be introduced while manufacturing, storage and transportation.
- With loading and unloading, the ultimate strength decreases. This phenomena is fatigue.
- Exact loadings are not known, we calculate approximate engineering stresses with the help of information that we have in hand.
- Measurements are not exactly correct and most of the design methods are based on certain simplifying assumptions.

Because of these reasons, we consider factor of safety while designing a part.

Q.6 (d) Solution:

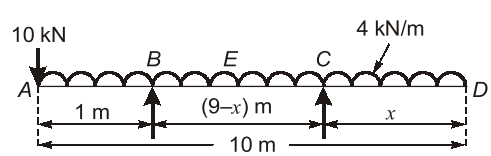

$$R_B + R_C = 10 + 4 \times 10$$

$$R_B + R_C = 50 \text{ kN} \quad \text{... (i)}$$

Since point E is point of contraflexure,

$$BM_E = 0 \text{ (Taking moment of all the forces on left side)}$$

$$\Rightarrow \quad -10 \times 5 - \frac{4 \times 5^2}{2} + R_B \times 4 = 0$$

$$R_B = \frac{50 + 50}{4} = 25 \text{ kN} \quad \text{... (ii)}$$

From (i) and (ii):

$$R_A = 25 \text{ kN}$$

$BM_E = 0$ (Taking moment of all the forces on right side)

$$-4 \times \frac{5^2}{2} + 25 \times (5 - x) = 0$$

$$\Rightarrow \quad (5 - x) = \frac{50}{25} = 2 \text{ m}$$

$$x = 5 - 2 = 3 \text{ m}$$

❍❍❍❍