S.No. : 01 ND_CE_W_300619

Irrigation Engineering

MADE EASY
India's Best Institute for IES, GATE & PSUs

Delhi | Noida | Bhopal | Hyderabad | Jaipur | Lucknow | Indore | Pune | Bhubaneswar | Kolkata | Patna

Web: www.madeeasy.in | **E-mail:** info@madeeasy.in | **Ph:** 011-45124612

CLASS TEST 2019-2020

CIVIL ENGINEERING

Irrigation Engineering

Date of Test : 30/06/2019

Answer Key

1.	(b)	7.	(c)	13.	(c)	19.	(c)	25.	(d)
2.	(d)	8.	(b)	14.	(c)	20.	(b)	26.	(a)
3.	(b)	9.	(b)	15.	(a)	21.	(c)	27.	(b)
4.	(b)	10.	(b)	16.	(b)	22.	(c)	28.	(b)
5.	(d)	11.	(d)	17.	(a)	23.	(a)	29.	(b)
6.	(a)	12.	(b)	18.	(c)	24.	(c)	30.	(c)

DETAILED EXPLANATIONS

2. (d)

Net irrigation water required by wheat crop during base period

= crop requirement of water – rainfall

= 60 – 12 = 48 cm = 0.48 m

Volume of water required, V_1 = area × 0.48 m^3

Volume of water supplied by canal during the base period of 120 days with an irrigation efficiency of 70%

$$V_2 = 2.02 \times (120 \times 86400) \times 0.7 = 14660352 \text{ m}^3$$

$$V_1 = V_2$$

$$A \times 0.48 = 14660352$$

$$A = 30542400 \text{ m}^3 = 3054.24 \text{ ha}$$

4. (b)

$$D = \frac{8.64B}{\Delta} = \frac{8.64 \times 25}{0.15} = 1440 \text{ ha/m}^3\text{/sec}$$

$$Q = \frac{A}{D} = \frac{2880}{1440} = 2 \text{ m}^3\text{/sec}$$

5. (d)

$$y = 0.8 \text{ m}$$

$$m = 0.90$$

∴ Critical velocity, $V_0 = 0.55 \text{ m } y^{0.64} = 0.55 \times 0.9 \times (0.8)^{0.64} = 0.4291 \text{ m/sec}$

$\simeq$ 43 cm/sec

6. (a)

Given, $S_c = 2.4$

Allowable crushing stress, $f = 7$ MPa

Limiting height of dam, $H = \dfrac{f}{(S_c - C + 1)\gamma_\omega}$

Ignoring uplift; ⇒ $C = 0$

$$H = \frac{7 \times 10^6}{(2.4+1) \times 9.81 \times 10^3} = 209.87 \text{ m} \simeq 210 \text{ m}$$

7. (c)

Water percolated in root zone = 1200 × 0.88 = 1056 m^3

Area = 1500 m^2

Depth of water applied, $d_w = \dfrac{1056}{1500} = 0.704$ m

$$d_w = \frac{\gamma_d}{\gamma_\omega} d.(FC - MC)$$

$$0.704 = \frac{1620}{1000} \times 2.4 \frac{(FC - 12)}{100}$$

$$FC = 30.10\% \simeq 30\%$$

© Copyright: MADE EASY

8. (b)

$$Q = 25 \text{ m}^3/\text{sec}$$
$$f = \text{silt factor} = 0.98$$

As per Lacey, $$V = \left(\frac{Qf^2}{140}\right)^{1/6} = \left(\frac{25\times(0.98)^2}{140}\right)^{1/6} = 0.745 \text{ m/sec}$$

∴ Area of flow, $$A = \frac{Q}{V} = \frac{25}{0.745} = 33.54 \text{ m}^2$$

11. (d)

Given, Consumptive use = 10 cm

Effective rainfall = 3 cm

∴ CIR (Consumptive Irrigation Requirement)

$$= C_u - R_e = 10 - 3 = 7 \text{ cm}$$
$$\text{NIR} = \text{CIR} + \text{LR} + \text{presowing}$$
$$\simeq \text{CIR} = 7 \text{ cm}$$
$$\eta_a = 80\%$$

∴ FIR (Field Irrigation Requirement) $$= \frac{\text{NIR}}{\eta_a} = \frac{7}{0.8} = 8.75 \text{ cm}$$

Given, $$\eta_c = 87.5\%$$

∴ GIR (Gross Irrigation Requirement) $$= \frac{\text{GIR}}{\eta_c} = \frac{8.75}{(87.5/100)} = 10 \text{ cm}$$

12. (b)

Sodium Adsorption Ratio, $$\text{SAR} = \frac{[\text{Na}^+]}{\sqrt{\frac{[\text{Ca}^{2+}]+[\text{Mg}^{2+}]}{2}}} = \frac{22}{\sqrt{\frac{3+1.5}{2}}} = 14.67$$

Since SAR is between 10 and 18, it is classified as medium sodium water.

13. (c)

Given, Electrical conductivity of saturated soil extract

$$(\text{EC})_e = 11\ \mu\text{mho/cm}$$

Electrical conductivity of irrigation water

$$(\text{EC})_i = 1.5\ \mu\text{mho/cm}$$

Leaching requirement, $$\text{LR} = \frac{(EC)_i}{2(EC)_e}\times 100 = \frac{1.5}{2\times 11}\times 100 = 6.8\%$$

14. (c)

Volume of water delivered to field = $Q \times$ time

$$= 100 \times 8 \times 3600 = 2880 \times 10^3 \text{ lit}$$
$$= 2880 \text{ m}^3$$

Runoff losses in the field = 420 m^3

∴ Water stored in the root zone = 2880 – 420 = 2460 m^3

© Copyright: MADE EASY

$$\text{Depth of water stored in root zone} = \frac{\text{Volume}}{\text{Area}} = \frac{2460}{1.6\times10^4} = 0.1538 \text{ m}$$

$$\text{Moisture holding capacity} = 20 \text{ cm per m depth (1.7 m)}$$
$$= 0.2 \times 1.7 = 0.34 \text{ m} = 34 \text{ cm}$$

∴ Water needed in the root zone during irrigation

$$= (100 - 50)\% \text{ of } 34 = 17 \text{ cm} = 0.17 \text{ m}$$

$$\text{Water storage efficiency} = \frac{\text{Water stored in the root zone}}{\text{Water needed in root zone prior to irrigation}} \times 100$$

$$\eta_s = \frac{0.1538}{0.17} \times 100 = 90.5\%$$

15. (a)

As per Blaney criddle formula, consumptive use (cm/month)

$$\text{PET or (Cu)} = \frac{kp}{40}[1.8t + 32]$$

$$= \frac{0.65\times7}{40}[1.8\times14.5+32] = 6.608 \text{ cm/month}$$

$$Cu = \frac{0.608\times10}{28} = 2.36 \text{ mm/day}$$

17. (a)

$$\text{Discharge, } Q = 12 \text{ m}^3\text{/sec}$$
$$\text{Loss} = 25\%$$
$$\text{Discharge at field} = 12 \times 0.75 = 9 \text{ m}^3\text{/sec}$$
$$\text{Duty at field} = 1250 \text{ ha/cumec}$$

∴ Area irrigated, $A = Q \times D = 1250 \times 9 = 1.125 \times 10^4$ ha

18. (c)

$$\text{Quantity of water applied} = 5 \times 6 \times 3600 \text{ m}^3 = 10.8 \text{ ha-m}$$

∴ $$\text{Depth of water applied} = \frac{10.8}{30} = 0.36 \text{ m}$$

$$\text{Depth stored} = 0.25 \text{ m}$$

∴ Water application efficiency, $\eta_a = \frac{0.25}{0.36} \times 100 = 69\%$

19. (c)

For wheat,

$$A = 0.3 \times 10{,}000 = 3000 \text{ ha}$$

$$D = \frac{8.64B}{\Delta} = \frac{8.64\times(4\times7)}{0.135}$$

$$= 1792 \text{ ha/cumec}$$

For Rice,

$$A = 0.15 \times 10{,}000 = 1500 \text{ ha}$$

$$D = \frac{8.64B}{\Delta} = \frac{8.64\times(3\times7)}{0.19}$$

$$= 954.95 \text{ ha/cumec}$$

© Copyright: MADE EASY

$$Q = \frac{3000}{1792} = 1.674 \text{ m}^3/\text{sec} \qquad Q = \frac{1500}{954.95} = 1.571 \text{ m}^3/\text{sec}$$

∴ So, design discharge. Q_{design} = Maximum (Q_{wheat}, Q_{rice})

$= 1.67 \text{ m}^3/\text{sec}$

20. (b)

Net depth of water needed = 1.6 × 90 (0.25 – 0.18) = 10.1 cm

$$\text{Depth of water at field} = \frac{10.1}{0.8} = 12.6 \text{ cm}$$

Conveyance losses = 15%

$$\therefore \quad \text{Depth of water at canal outlet} = \frac{12.6}{0.85} = 14.8 \text{ cm}$$

21. (c)

For 1.5 H : 1 V

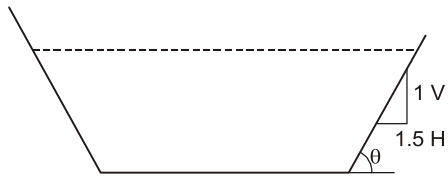

$$\tan\theta = \frac{1}{1.5}$$

$$\sin\theta = 0.554$$

$$\frac{\tau_c'}{\tau_c} = \sqrt{1-\frac{\sin^2\theta}{\sin^2\phi}}$$

$$\frac{\tau_c'}{\tau_c} = \sqrt{1-\left(\frac{0.554}{\sin 37}\right)^2} = 0.391$$

For stability on banks

$0.75\,\gamma_w RS \le 0.391,\ \tau_c = 0.391\,(\gamma_w RS)$

For stability on bed, $RS = \frac{d}{11}$

$$0.75\,\gamma_w RS \le 0.391\left(\gamma_w \times \frac{d}{11}\right)$$

$$RS \le \frac{0.391}{11\times 0.75}\,d$$

$$RS \le \frac{d}{21}$$

$$R \le \frac{d}{21S}$$

22. (c)

Normal scour depth, $R = 1.35\left(\frac{q^2}{f}\right)^{1/3} = 1.35\left(\frac{(10)^2}{1}\right)^{1/3} = 6.26 \text{ m}$

© Copyright: MADE EASY

23. (a)

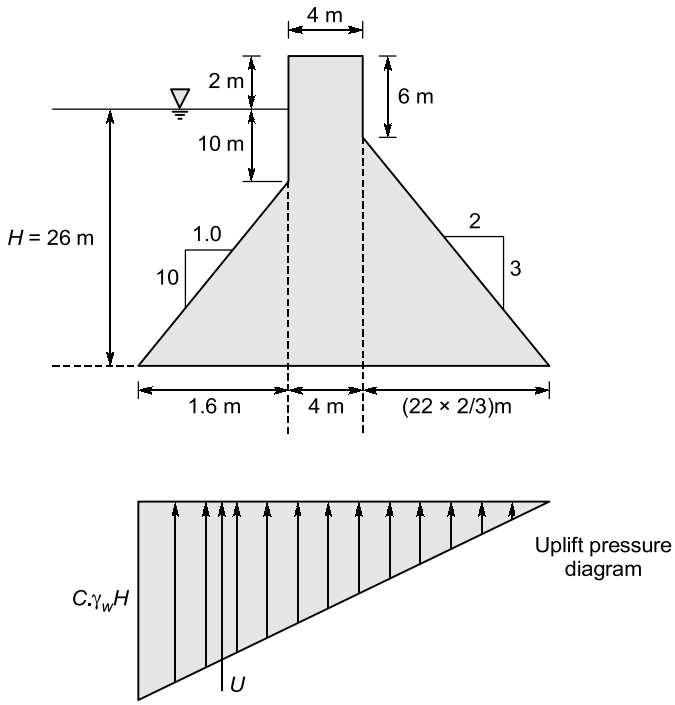

$$\text{Base width of dam} = \left(1.6 + 4 + \frac{44}{3}\right) = 20.27 \text{ m}$$

∴ Uplift pressure force per unit length of the dam

$$U = \text{Area under uplift pressure diagram}$$

$$= \frac{1}{2}(C\gamma_w H) \times B = \frac{1}{2} \times 0.7 \times 10 \times 26 \times 20.27 = 1844.57 \text{ kN/m}$$

24. (c)

Month	Running days	Discharge (m^3/sec)	Volume (ha-m) $= \dfrac{86400 \times \text{running day} \times \text{discharge}}{10000}$
August	14	2	$\dfrac{86400 \times 14 \times 2}{10000} = 241.92$
September	28	2.5	$\dfrac{86400 \times 28 \times 2.5}{10000} = 604.8$
October	21	2.25	$\dfrac{86400 \times 21 \times 2.25}{10000} = 408.24$
November	21	2.25	$\dfrac{86400 \times 21 \times 2.25}{10000} = 408.24$
			Total volume = 1663.2 ha=m

$$\therefore \quad \text{Depth of water used} = \frac{1663.2}{5000} = 0.3326 \text{ m}$$

© Copyright: MADE EASY

Base period, $B = 31 + 30 + 31 + 30 = 122$ days

∴ Overall duty, $D = \dfrac{8.64B}{\Delta} = \dfrac{8.64 \times 122}{0.3326} = 3169.21$ ha/m³/sec

25. (d)

Given,

Area, $A = 0.15$ ha $= 1500$ m²

Discharge, $Q = 0.035$ m³/sec

Depth, $y = 8$ cm

Finfiltration rate, $f = 6$ cm/hr

Time required, $t = 2.303\dfrac{y}{f}\log\left[\dfrac{Q}{Q - fA}\right]$

$$= 2.303 \times \frac{8}{6}\log\left[\frac{0.035}{0.035 - \dfrac{6 \times 10^{-2}}{3600} \times 1500}\right]$$

$t = 1.67$ hr

26. (a)

Given,

Depth of cutoff pile, $d = 6$ m

Design head $= 6$ m

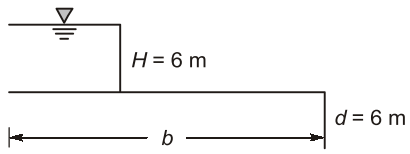

Safe exit gradient, $G_E = \dfrac{1}{6}$

$$G_E = \frac{H}{d} \cdot \frac{1}{\pi\sqrt{\lambda}}$$

$$\frac{1}{6} = \frac{6}{6} \cdot \frac{1}{\pi\sqrt{\lambda}}$$

$$\lambda = \frac{36}{\pi^2}$$

$$\lambda = 3.648$$

Also, $\lambda = \dfrac{1 + \sqrt{1 + \alpha^2}}{2}$ (where, $\alpha = b/d$)

$$3.648 = \frac{1 + \sqrt{1 + \alpha^2}}{2}$$

$$\alpha = 6.216$$

α Horizontal floor length, $b = 6.216 \times 6 = 37.296$ m

© Copyright: MADE EASY

27. (b)

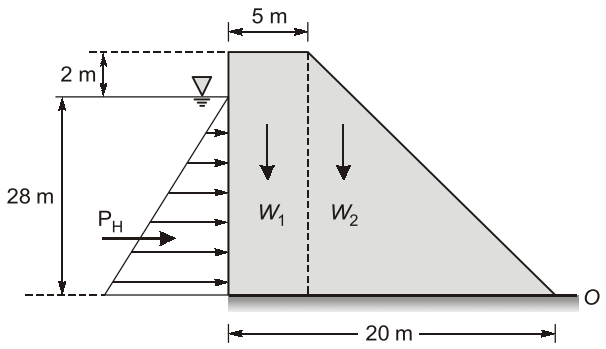

γ_c = 24 kN/m^3 (Considering inside length of dam as unity)

Force	Calculation	Magnitude (kN/m)	Lever arm (in m) (about 0)	Moment in (kN-m/m) (about 0)
W_1	24 × 30 × 5	3600	17.5	63000
W_2	1/2 × 24 × 30 × 15	5400	10	54000
P_H	1/2 × 9.8 × (28)^2	3845.52	9.33	35878.7

∴ Resisting moment, M_R = 63000 + 54000 = 117000 kN-m/m

Overtuning moment, M_O = 35878.7 kN-m/m = 3.26

∴ FOS against overtuning $= \dfrac{M_R}{R_O} = \dfrac{117000}{35878.7} = 3.26$

(FOR) against sliding $= \dfrac{\mu \Sigma V}{\Sigma H} = \dfrac{0.5 \times (3600 + 5400)}{3845.52} = 1.17$

28. (b)

$$f = 1.76\sqrt{d_{mm}}$$

∴ $f_A > f_B$

$$R = 1.35\left(\frac{q^2}{f}\right)^{1/3}$$

∴ $R_A < R_B$

29. (b)

Total creep length = 2 × 5 + 30 + 2 × 8 = 56 m

∴ Total head cost, H = 5 m

∴ Head lost upto C $= i \times (10 + 20) = \dfrac{H}{L} \times 30$

$$= \frac{5}{56} \times 30 = 2.678 \text{ m}$$

∴ Available head at point C = 5 – 2.678 = 2.322 m

■■■■

© Copyright: MADE EASY