CLASS TEST

Sl.: 01SKEE_ABCDEFGHI_260525

MADE EASY
Leading Institute for IES, GATE & PSUs
Delhi | Bhopal | Hyderabad | Jaipur | Pune | Kolkata
Web: www.madeeasy.in | **E-mail:** info@madeeasy.in | **Ph:** 011-45124612

ANALOG ELECTRONICS

ELECTRICAL ENGINEERING

Date of Test : 26/05/2025

ANSWER KEY

1.	(a)	7.	(d)	13.	(a)	19.	(c)	25.	(c)
2.	(b)	8.	(a)	14.	(a)	20.	(a)	26.	(a)
3.	(d)	9.	(b)	15.	(d)	21.	(a)	27.	(a)
4.	(b)	10.	(a)	16.	(b)	22.	(d)	28.	(b)
5.	(d)	11.	(a)	17.	(b)	23.	(b)	29.	(a)
6.	(d)	12.	(c)	18.	(b)	24.	(b)	30.	(d)

DETAILED EXPLANATIONS

1. (a)

As we know for a *n-p-n* BJT transistor

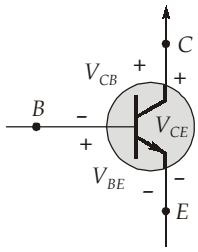

$$V_{CE} = V_{BE} + V_{CB}$$
$$= 0.7 + 0.2 = 0.9 \text{ V}$$

Since, $V_{CE} > 0.2$ $[V_{CE(\text{sat})} = 0.2 \text{ V}]$

Therefore transistor is operating in active region.

2. (b)

$$g_m = \frac{\partial I_D}{\partial V_{GS}} = \frac{\partial}{\partial V_{GS}}\left[K_n(V_{GS} - V_{\text{th}})^2\right]$$
$$= 2K_n(V_{GS} - V_{\text{th}})$$

3. (d)

Laplace equivalent circuit,

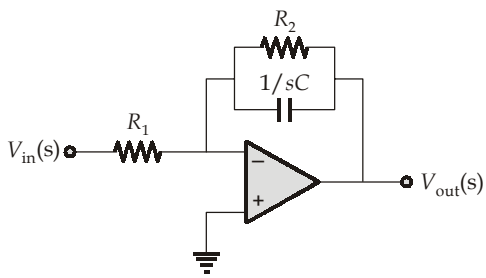

$$\frac{V_0(s)}{V_i(s)} = \frac{-R_2 \parallel \left(\frac{1}{sC}\right)}{R_1}$$

$$\frac{V_0(s)}{V_i(s)} = \frac{-R_2}{R_1} \times \frac{1}{1 + sCR_2}$$

It is low pass filter with, $\omega_c = \dfrac{1}{R_2C}$

So, $f_c = \dfrac{1}{2\pi R_2C}$

4. (b)

The overall gain, $A_0 = (A)^3 = A^3 = 10^3 = 1000$

For system to be oscillator,

$$A_0\beta = -1$$
$$|A_0\beta| = 1$$
$$A_0\beta = 1$$
$$1000\ \beta = 1$$
$$(1000\ \beta) = 1$$

5. (d)

The duty cycle of above astable multivibrator is

$$\%\ \text{duty cycle} = \frac{T_{ON}}{T} \times 100 = \frac{R_1 + R_2}{R_1 + 2R_2} \times 100$$

$$= \frac{3R_2 + R_2}{3R_2 + 2R_2} \times 100 = 80\% > 50°$$

So, duty cycle of the output wave is greater than 50%.

6. (d)

$$Q = 0.5\sqrt{\frac{C_2}{C_1}} = 0.5\sqrt{\frac{1.64\ \text{nF}}{820\ \text{pF}}} = 0.707$$

The pole frequency, $f_p = \dfrac{1}{2\pi R\sqrt{C_1C_2}} = \dfrac{1}{2\pi(30)\times 10^3\sqrt{820\times 1.64\times 10^{-21}}}$

$$= 4.58\ \text{kHz}$$

Here $Q = 0.707$ tells us that this is a butterworth response, so cutoff frequency is the same as the pole frequency,

$$f_c = f_p = 4.58\ \text{kHz}$$

7. (d)

- In the circuit R_E provides feedback to the circuit, the feedback is directly connected to the output node. So voltage sampling.
- The feedback is not directly connected to input node, so series mixing.

So, feedback topology is voltage series feedback.

8. (a)

The diode current, $I_D = \dfrac{2.8 - 0.8}{2} = 1\ \text{mA}$

The thermal voltage, $V_T = \dfrac{KT}{e} = \dfrac{1.38\times 10^{-23}\times 300}{1.6\times 10^{-19}} = 25.87\ \text{mV}$

The dynamic resistance, $r_d = \dfrac{\eta V_T}{I_d} = \dfrac{2\times 25.87}{1}$

$$r_d = 51.75\ \Omega \approx 52\ \Omega$$

© Copyright: MADE EASY

9. (b)

For Silicon diode, $\frac{dV}{dT} \approx -2.5 \text{ mV/°C}$

Here, $dV = 640 - 700 = -60 \text{ mV}$

So, $dT = \frac{dV}{-2.5} = \frac{-60}{-2.5} = 24$

So, $T° = T_1 + dT = 30° + 24°$

$T = 54° \text{ C}$

10. (a)

Let's assume diode is off.

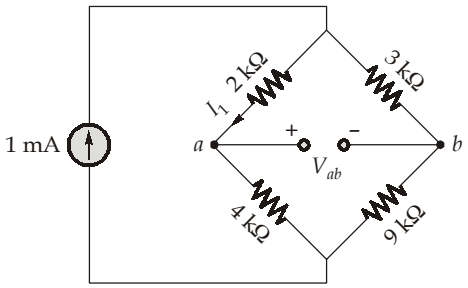

The current, $I_1 = \frac{12}{12+6} \times 1 = \frac{2}{3} \text{ mA}$

So, $V_{ab} = 4I_1 - 9I_2 = 4 \times \frac{2}{3} - 9 \times \frac{1}{3} = -\frac{1}{3} \text{ Volt}$

The diode will be reverse bias, because V_{ab} is negative.

Current in diode is zero, so current in 1 kΩ resistor is zero.

11. (a)

As we know,

$$I_S = I_Z + I_L$$
$$I_Z = I_S - I_L$$
$$I_{Z\,(min)} = I_{S\,(min)} - I_{L\,(max)}$$
$$2 \text{ mA} = I_{S\,(min)} - 4 \text{ mA}$$
$$I_{S\,(min)} = 6 \text{ mA}$$
$$\frac{V_{i(min)} - V_Z}{R_S} = 6 \text{ mA}$$
$$V_{i\,(min)} = 6 \times 5 + 50 = 80 \text{ V}$$

and $I_{Z\,(max)} = I_{S\,(max)} - I_{L\,(min)} \Rightarrow I_{s(rms)} = 8 \text{ mA}$

$$8 = \frac{V_{i(max)} - V_Z}{R_S} \Rightarrow V_{i\,(max)} = 8 \times 5 + 50 = 90 \text{ V}$$

12. (c)

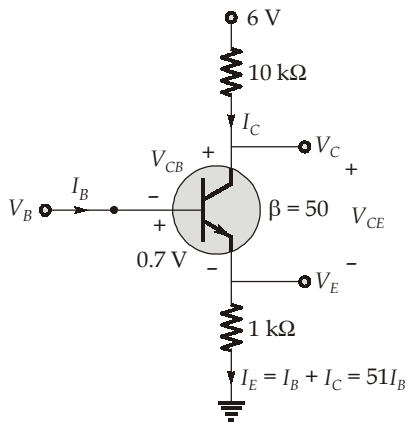

As we know, $V_{CE} = V_{BE} + V_{CB}$ $[\because V_C = V_B \Rightarrow V_{CB} = 0 \text{ V}]$

$$V_{CE} = 0.7 \text{ V}$$

$$V_B = V_{BE} + V_E$$

$$I_C = \frac{6 - V_C}{10} = \frac{6 - 0.7 - V_E}{10} = 50I_B$$

$$5.3 - 500\, I_B = V_E$$

Also $V_E = 51\, I_B \times 1$

Therefore, $51\, I_B + 500\, I_B = 5.3$

$$I_B = 9.61 \times 10^{-3} \text{ mA}$$

$$I_C = \beta I_B = 9.61 \times 10^{-3} \times 50 = 0.48 \text{ mA}$$

Hence, $V_C = 6 - I_C \times 10$

$$= 6 - 0.48 \times 10 = 1.19 \text{ V}$$

Therefore, $V_B = V_C = 1.19 \text{ V}$

13. (a)

Since β = 200, we can neglect the base current of transistor,

DC analysis

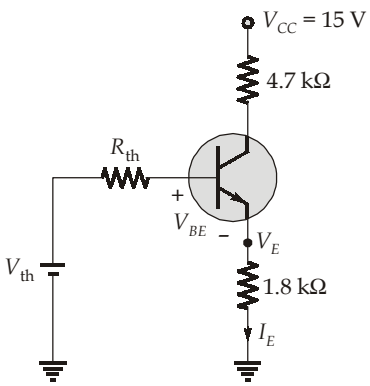

$$R_{th} = (75 \,||\, 15)\text{k}\Omega = 12.5 \text{ k}\Omega$$

$$V_{th} = \frac{15}{90} \times 15 = 2.5 \text{ V}$$

© Copyright: MADE EASY

$$V_E = V_{th} - V_{BE} = 2.5 - 0.7 = 1.8 \text{ V}$$

Therefore,
$$I_C = I_E = \frac{V_E}{R_E} = \frac{1.8}{1.8} = 1 \text{ mA}$$

$$r_\pi = \beta \cdot \frac{V_T}{I_C} = \frac{200 \times 26}{1} = 5.2 \text{ k}\Omega$$

AC model

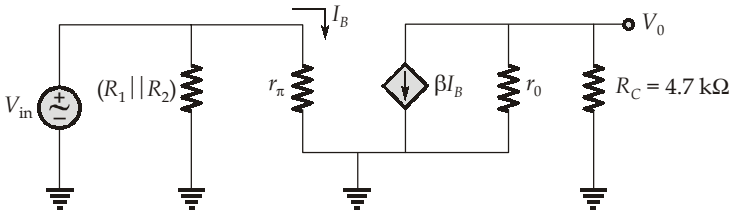

Where,
$$r_0 = \frac{V_A}{I_C} = \frac{80}{1 \text{ mA}} = 80 \text{ k}\Omega$$

$$R_L' = R_C \,||\, r_0 = 80 \,||\, 4.7 = 4.439 \text{ k}\Omega$$

Here,
$$V_0 = -\beta I_B R_L'$$

and
$$V_{in} = r_\pi I_B$$

Voltage gain,
$$\left|\frac{V_0}{V_{in}}\right| = \left|-\frac{\beta R_L'}{r_\pi}\right|$$

$$= \frac{200 \times 4.439}{5.2} = 170.73$$

14. (a)

For given circuit DC analysis:

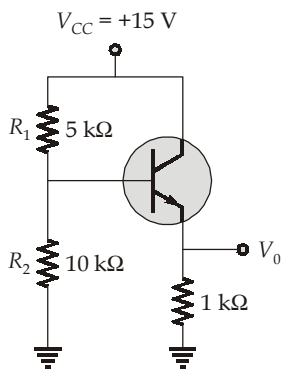

$$(V_B)_q = \frac{V_{CC} \times R_2}{R_1 + R_2} = \frac{15 \times 10 \text{k}\Omega}{(10+5)\text{k}\Omega} = 10 \text{ V}$$

$$(V_E)_q = V_B - 0.7 = 10 - 0.7 = 9.3 \text{ V}$$

$$(V_{CE})_q = (V_C)_Q - (V_E)_Q = 15 - 9.3 = 5.7 \text{ V}$$

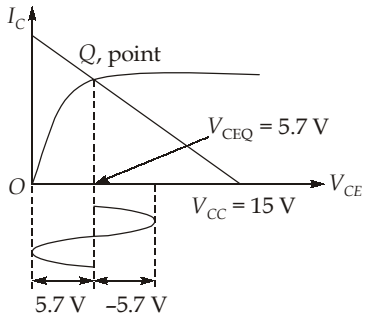

∴ Let maximum undistorted peak to peak output voltage, $V_{0(p-p)}$

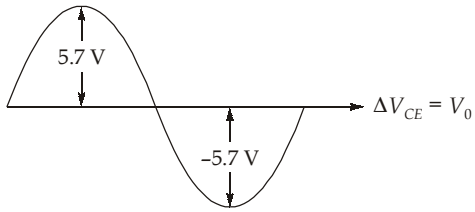

$$V_{0(p-p)} = 2 \times 5.7 = 11.4 \text{ V}$$

15. (d)

The first op-amp behave as voltage buffer. So output voltage of first op-amp

$$v_1 = v_s$$
$$v_1 = 12 \text{ V}$$

2nd op-amp behaves as non inverting op-amp.

So, $$v_0 = v_2\left(1+\frac{R_2}{R_1}\right)$$

$$v_0 = v_1\left(1+\frac{R_2}{R_1}\right) = 12\left(1+\frac{12}{8}\right) = 30 \text{ V}$$

Since output voltage, $(v_0 = 30) > (+v_{sat} = 20)$

So, output voltage, $v_0 = +20$ V

16. (b)

Given that, $Z_i = 1\ \text{k}\Omega$

$Z_0 = 10\ \text{k}\Omega$

For voltage amplifier, $Z_{if} = (1 + A\beta)Z_i$

Given, $A\beta = 9$

So, closed loop input impedance,

$$Z_{if} = (1 + 9) \times 1 = 10\ \text{k}\Omega$$

The output impedance, $$Z_{of} = \frac{Z_0}{1+A\beta} = \frac{10}{1+9} = 1\text{k}\Omega$$

So, $$\frac{Z_{if}}{Z_{of}} = \frac{10}{1} = 10$$

© Copyright: MADE EASY

17. (b)

The slope of graph in linear region,

$$m = \frac{-10}{1} = -10$$

and $$\text{Slope, } m = \frac{V_0}{V_{in}} = -10$$

For inverting amplifier, $$\frac{V_0}{V_{in}} = \frac{-R_2}{R_1}$$

$$\text{Slope, } m = \frac{-R_2}{R_1} = -10$$

$$\frac{R_2}{R_1} = 10$$

$$R_2 = 10R_1$$

$$R_2 = 10 \times 10 = 100\ \text{k}\Omega$$

18. (b)

By Concept of virtual short

$$I_1 = \frac{V_i}{100 \times 10^{-3}} = 10V_i$$

By Y-parameter equation, $$I_1 = Y_{11}V_1 + Y_{12}V_2$$

$$I_2 = Y_{12}V_1 + Y_{22}V_2$$

Here, $$V_1 = 0,$$

$$I_1 = 10\ V_i$$

So, $$I_1 = 10V_i = (0) + Y_{12}V_2$$

$$10\ V_i = \frac{-1}{12}V_2$$

$$V_2 = -10 \times 12\ V_i = -120V_i$$

But $V_o = V_2$

So, $$V_o = -120V_i$$

$$\frac{V_o}{V_i} = -120$$

19. (c)

Circuit-1:

Analog multiplier

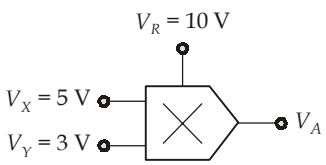

$$V_A = \frac{V_X \cdot V_Y}{V_R} = \frac{5 \times 3}{10} = \frac{15}{10}$$

Circuit-2:

Analog divider

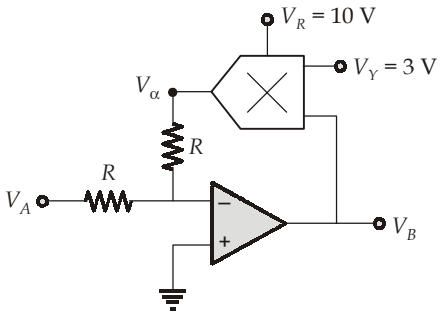

$$V_\alpha = \frac{V_Y \cdot V_B}{V_R}$$

$$V_A = -V_\alpha$$

$$V_\alpha = -V_A$$

$$-V_A = \frac{V_Y \cdot V_B}{V_R}$$

$$V_B = -V_R \cdot \frac{V_A}{V_Y} = -10 \times \frac{15}{10} \cdot \frac{1}{3} = -5 \text{ V}$$

Circuit-3:

Phase shifter

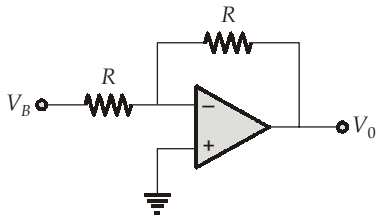

$$V_0 = -V_B$$

$$= -(-5 \text{ V})$$

$$V_0 = 5 \text{ V}$$

20. (a)

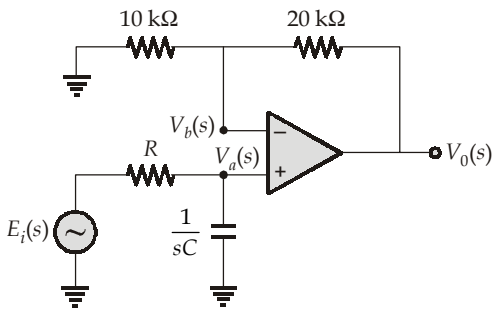

© Copyright: MADE EASY

By voltage division rule,

$$V_a(s) = \frac{\frac{1}{sC}}{R+\frac{1}{sC}} E_i(s) = \frac{1}{(1+sCR)} E_i(s)$$

By virtual short, $V_b(s) = V_a(s)$

So, $V_o(s) = V_b(s)\left[1+\frac{20}{10}\right] = 3V_b(s)$

$$V_o(s) = \frac{3}{(1+sCR)} E_i(s)$$

Here, $\omega = 10, \quad s = j\omega$

$$V_o(j\omega)\big|_{\omega=10} = \frac{3}{1+(j10)(10^{-6})(100\times10^3)}\times1\angle0° = \frac{3}{(1+j1)}\times1\angle0°$$

$$V_o(j10) = 2.12\angle{-45°} \text{ V}$$

So, $V_o(t) = 2.12\cos(10t - 45°)$

So, $A = 2.12$

21. (a)

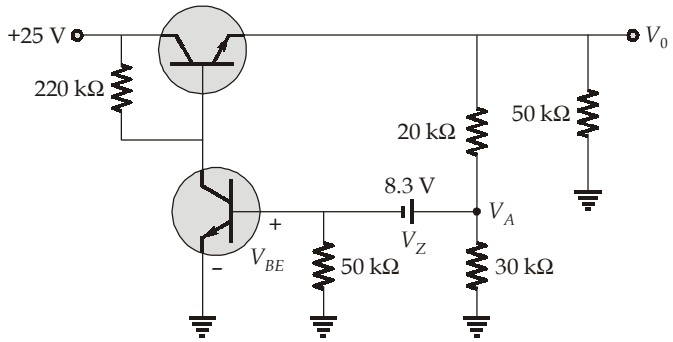

$$V_A = V_Z + V_{BE}$$
$$= 0.7 + 8.3$$
$$= 9 \text{ V}$$

$$V_A = \frac{30\text{k}}{20\text{k}+30\text{k}} V_0$$

$$V_0 = \frac{5}{3}\times9 = 15 \text{ V}$$

22. (d)

The AC equivalent circuit of MOS

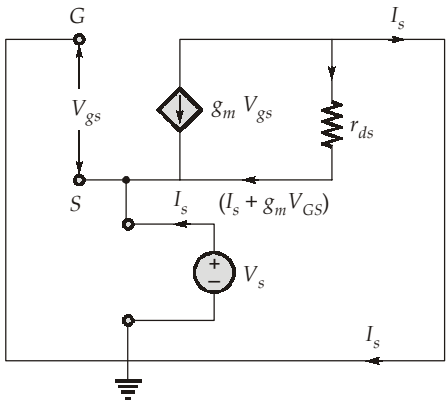

$$V_{gs} = -V_s \quad \text{...(i)}$$

$$V_s = (I_s - g_m V_s)\, r_{ds}$$

$$V_s + g_m r_{ds} V_s = I_s r_{ds}$$

$$V_s(1 + g_m r_{ds}) = r_{ds} I_s$$

$$R_{Th} = \frac{V_s}{I_s} = \frac{r_{ds}}{(1 + g_m r_{ds})}$$

23. (b)

$$I_{C1} = I_{E1} = \frac{V - 0}{1\ \text{k}\Omega} \quad (\because \beta \text{ is large})$$

$\Rightarrow$ $I_{C1} = I_{C1} = 5$ mA

$V_{C1} = V_{CC} - I_{C1}R_{C1}$

$\Rightarrow$ $V_{C1} = 12 - 1.8 \times 5$

$\Rightarrow$ $V_{C1} = 3$ V

and $V_{C2} = V_{C1}$ (virtual short)

$\Rightarrow$ $V_{C2} = 3$ V

So, $I_{C2} = \dfrac{12 - V_{C2}}{1\ \text{k}\Omega}$

$\Rightarrow$ $I_{C2} = \dfrac{12 - 3}{1}$ mA

$\Rightarrow$ $I_{C2} = 9$ mA

As β is very high, $I_{C2} = I_o$

$\Rightarrow$ $I_o = 9$ mA

© Copyright: MADE EASY

24. (b)

During Positive Cycle :

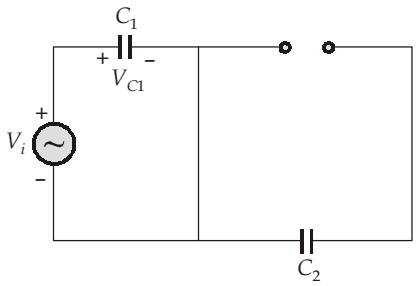

D_1 – ON, D_2 – OFF

$$V_{C1} = V_i|_{max}$$

$$\Rightarrow \quad V_{C1} = 8 \text{ V}$$

At $t = \frac{\pi}{2}$ or $\frac{T}{4}$, $\quad V_{C1} = 8$ V

$$V_i < V_{C1}$$

D_1 – OFF

$\therefore$ C_1 holds its previous value.

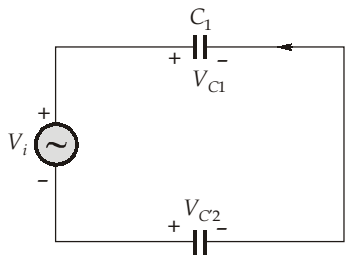

During negative cycle of V_i

D_1 – OFF, D_2 – ON

$$-V_{C2} = V_i - V_{C1}$$

At $t = \frac{3\pi}{2}$ or $\frac{3T}{4}$

$$V_i = -8 \text{ V}$$

$$-V_{C2} = -8 - 8 = -16 \text{ V}$$

$$\Rightarrow \quad -V_{C2} = -16 \text{ V}$$

or $\quad t = \frac{3T}{4}$, D_2 – OFF

Under steady state

$$V_{C1} = 8 \text{ V}$$

$$V_{C2} = 16 \text{ V}$$

25. (c)

For the LED to turn ON, output voltage, $V_o > 0$ V

i.e., $\quad V = V_{sat}$, the LED will turn ON

Hence, $\quad V_{in} > V_1$ for the LED to turn ON

$$V_1 = 18 \times \frac{10}{10 + 20} \quad \text{(Voltage Division Rule)}$$

$$V_1 = 6 \text{ V}$$

$$\Rightarrow \quad V_{in} > 6 \text{ V}$$

26. (a)

By KCL at node 1

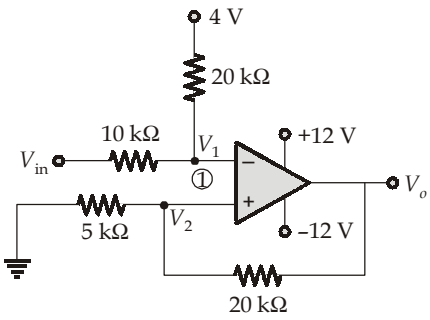

$$\frac{V_1 - V_{in}}{10} + \frac{V_1 - 4}{20} = 0$$

$\Rightarrow$ $$2V_1 - 2V_{in} + V_1 - 4 = 0$$

$\Rightarrow$ $$3V_1 - 2V_{in} = 4$$

$\Rightarrow$ $$V_1 = \frac{4 + 2V_{in}}{3}$$

$$V_{ref} = 12 \times \frac{5}{5+20} \text{ V}$$

$$V_{ref} = 2.4 \text{ V}$$

For $V_1 > 2.4$ V, $$V_o = -V_{sat}$$

$$\frac{4 + 2V_{in}}{3} > 2.4 \Rightarrow 4 + 2V_{in} > 7.2$$

$\Rightarrow$ $$V_{in} > 1.6 \text{ V} \Rightarrow V_{UTP} = 1.6 \text{ V}$$

For $V_1 > -2$, $$V_o = V_{sat}$$

$$\frac{4 + 2V_{in}}{3} > -2.4 \Rightarrow 4 + 2V_{in} > -7.2$$

$\Rightarrow$ $$V_{in} > -5.6 \text{ V}$$

$\Rightarrow$ $$V_{LTP} = -5.6 \text{ V}$$

$$V_{th} = V_{UTP} - L_{LTP}$$

$\Rightarrow$ So, Hystersis width, $$V_{th} = 7.2 \text{ V}$$

27. (a)

For $V_i = 8$ V, D_A and D_B are ON.

So, $$V_o = 8 \text{ V}$$

$$I_o = \frac{10 - V_i}{20} \text{mA}$$

$\Rightarrow$ $$I_o = \frac{2}{20} = 0.1 \text{ mA}$$

$\Rightarrow$ $$I_o = 0.1 \text{ mA}$$

$\Rightarrow$ $$I_o = 100 \ \mu\text{A}$$

© Copyright: MADE EASY

28. (b)

When the diode is conducting

$$V_c = V_i - 0.7 - 0.3$$

$$\Rightarrow \quad V_c = 6 - 1 = 5 \text{ V}$$

When the diode is not conducting,

$$V_i = -V_c - V_o \Rightarrow V_o = -(V_i + V_c)$$

$$\Rightarrow \quad V_o = -V_i - 5 \text{ V}$$

So, dc value of output voltage is –5 V.

29. (a)

$$A_d = 10^3 = \frac{V_o}{V_2 - V_1}$$

$$\Rightarrow \quad 10^3 = \frac{-8}{4 - V_1} \quad \Rightarrow \quad 4 - V_1 = -0.008$$

$$\Rightarrow \quad V_1 = 4.008 \text{ V}$$

then, common mode input signal,

$$V_c = \frac{4.008 + 4}{2}$$

$$\Rightarrow \quad V_c = 4.004$$

30. (d)

Applying KVL we get,

$$V_{CC} - I_C R_C - V_{CE} = 0$$

$$I_C = \frac{V_{CC} - V_{CE}}{R_C} = \frac{3 - 0.2}{1\text{k}} = 2.8 \text{ mA}$$

$$I_B = \frac{I_C}{\beta} = \frac{2.8\text{mA}}{50} = 56 \ \mu\text{A}$$

■■■■